Chapter 4

Network Management

Successful EPLRS network operations management requires close coordination between communicators throughout the network and the users requiring support. The G6 must establish an EPLRS control network to support system management. Figure 4-1 shows the SYSCON network.

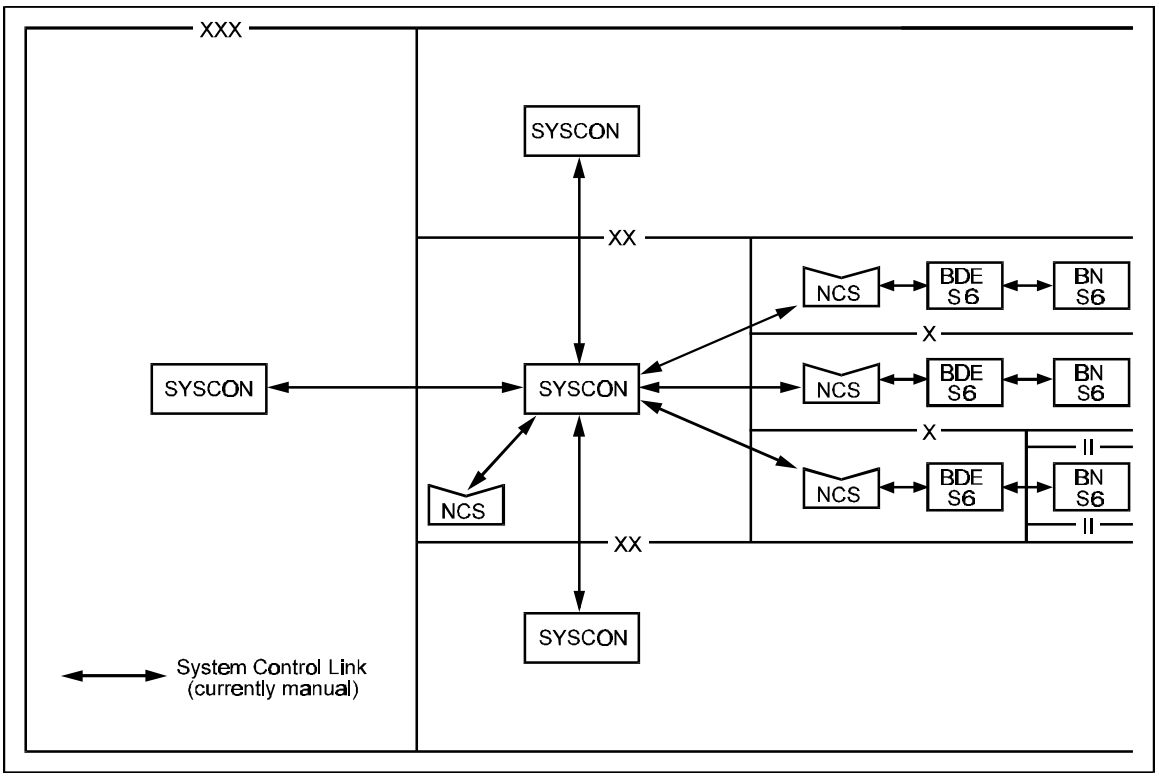

Figure 4-1. SYSCON Network

DEPLOYMENT PHASE

4-1. In the deployment phase, the planning function changes character. All of the predeployment planning factors are set in motion and the SYSCON planner must anticipate EPLRS network needs to keep pace with the dynamics of the battlefield. Overlap exists in the planning factor. The planner must carefully analyze any situation in the deployment phase for cause and effect relationships. When a problem arises, there are normally several options to consider. The best solution is dependent on the situational

factors of the supported units and the flexibility that was designed into the EPLRS signal support plan during the predeployment phase.

EPLRS OPERATION DURING DEPLOYMENT

4-2. The following paragraphs describe system operational considerations and management tools available for support during deployment.

CONTROL DURING SYSTEM OPERATIONS

4-3. Once deployed, the NCS's and the SYSCON's roles are modified. The NCS operator is the technical controller of the NCS community and becomes the direct interface between the users and the system. The NCS responds to updates on user requirements. The SYSCON maintains operational and technical control (TECHCON) over the NCSs. The SYSCON maintains the network performance at the highest level possible while responding to major troop movements or reconfiguration of the network because of battlefield dynamics. The effectiveness of each NCS is based on receiving an accurate and timely status from each of the controlled NCSs.

AUTOMATIC NETWORK CONTROL VERSUS SYSCON

4-4. The automatic network control manages the central resource, relay assignment, and NCS community maintenance as input into the database. The SYSCON manages the input to the database from dynamic user requirements and the physical resources such as reference RSs, dedicated relays, and cryptographic keys. The larger perspective of systems control also encompasses the entire division and corps areas with detailed coordination among NCSs and other division EPLRS communities.

PREVENTIVE DETECTION

4-5. Preventive detection accurately detects swings in network performance early enough to affect change so that the network does not fall below the quality standard required by users. To accomplish this, timeliness and accuracy of performance information is important. The recovery time of the network in response to corrective action takes longer as the network performance margin deteriorates.

4-6. At the manual SYSCON, there is no interactive link with the NCSs. The manual SYSCON's response for preventive detection may be slow and may affect the user's service. The SYSCON must quickly detect a problem through the normal swings of network performance, then respond with corrective actions so that the network does not reach the degraded state. Solid performance measures, training of SYSCON personnel, and experience will allow efficient management of the division EPLRS network and maintain operation of the network above a degraded performance threshold.

TREND ANALYSIS

4-7. SYSCON uses trend analysis to prepare for future changes in the division EPLRS network. The SYSCON manager views the overall battle situation and general movement of troops so that he can make the necessary changes to the network to provide continued quality user support. For example, if a maneuver brigade is conducting a breakthrough of enemy defenses, EPLRS must be able to support the brigade in this new territory. This support may require a shift of EPLRS resources such as displacing a GR-RS to provide continued position location accuracy.

4-8. Because of terrain in the new area, a dedicated relay may be deployed to ensure solid connectivity to the forward RSs. The supporting signal organization owns both of these resources, and the SYSCON controls them. By viewing the trend of this brigade's activity, the SYSCON can plan employment of the necessary resources before the user's actually need it.

4-9. If this trend in the brigade's movement continues at a rapid pace, then the SYSCON would consider implementing the CONOPS plan and displacing an NCS forward in a phased process. The intent is to maintain an optimum level of network performance.

SYSCON TOOLS

4-10. EPLRS makes available to the manual SYSCON information that is gathered from each of the deployed NCSs. Besides the normal voice communications over the MSE area telephone system or VHF-FM single-channel radio, the manual SYSCON and the NCSs can exchange free-text messages over the EPLRS. ISYSCON will be able to obtain positions and library information from the NCSs and input changes via an EPLRS needline.

4-11. The NCS can provide printouts that are useful to the SYSCON. Available printouts of NCS data include–

- System tabular data (system monitor data and advisory counts).
- Unit tabular data.
- Unit position data.
- Unit library data.
- NAVAIDS.
- PDIs.
- Notice/Alias.
- Needline library.

4-12. The SYSCON decides which printouts to request and then collects this information from each NCS. The data is reviewed for NCS community specific system control requirements and compared with the other NCS data to identify division EPLRS system control requirements. The SYSCON establishes procedures for the periodic submission of NCS printouts. Certain information, such as that found in the system tabular data, is submitted more frequently since it provides an overview of the network status.

Information in printouts such as full unit library data or needline library is very extensive, and the SYSCON does not require them on a frequent basis.

4-13. The SYSCON must set a reasonable time for the submission of the NCS reports. This allows the NCS operator the maximum time possible to attend to the needs of the users that the NCS community supports. This dictates that the operator submits higher required frequency reports on a recurring time period (every 4 hours); however, longer, less time critical reports can be submitted once a day. During periods of high activity in the network, the SYSCON requires more frequent reports from one, several, or all NCSs. The reports are sent to the manual SYSCON quickly via facsimile (FAX) over the MSE system. For further information on EPLRS printouts, refer to the DEP TM 11-5825-290-10.

EPLRS SIGNAL SUPPORT PLAN DURING DEPLOYMENT

4-14. During deployment, the requirements established in the four functional areas of the signal support plan during predeployment are met to support the conduct of the operation. Three aspects of deployment are–

- Operation during initialization.
- Operation during deployment.
- Operation during transition.

The aspects addressed in each of the plan's functional areas (refer to Chapter 3) are discussed in the following paragraphs.

NETWORK OPERATIONAL PLANNING

4-15. The planning considerations for this functional area still apply in the deployment phase. The SYSCON planner must constantly be aware of the geography and terrain of the current AOR and the expanded AOR. This affects the planned locations of GR-RSs, CONOPS plans, frequency management/resource allocation, and COMSEC material distribution.

Geography and Network Analysis

4-16. As with all radio systems, geography and terrain of the AOR is a determining factor for the successful deployment and operation of the EPLRS. Once deployed, the original support plan may have to be modified because of the tactical situation or movement of the force. This may result in the deployment of a reserve NCS, readjustment of existing AORs, and corresponding changes to the unit, message, and needline libraries. Any physical changes to the structure of the EPLRS are achievable within the geography and terrain limitations of the AOR.

System Configuration and Parameters

4-17. It is critical that the SYSCON continually monitor the CONOPS plan and requirements for employment of GR-RSs and gateway RSs for reference, relay, or gateway functions. Other operational parameters are routine inputs required upon initialization of an NCS at a location or at the initialization of the division EPLRS network.

4-18. **Network Initialization Plan**. Once deployed, all NCSs and RSs within the division network maintain the master timing and communication allocations of the division EPLRS network. The network initialization plan is not a consideration in the deployment phase as long as the integrity of the division community is maintained.

4-19. **Number and Location of GR-RSs and Gateways**. GR-RSs and gateways assigned to signal units are employed to enhance or supplement network operations under varying tactical situations. They are used as grid references, dedicated relays, or gateways.

4-20. From a SYSCON perspective, the performance of the division community depends upon the effective employment of GR-RSs. However, often no output equates the degree of improved performance to the employment of GR-RSs and gateways. Therefore, the SYSCON must observe other performance measures to determine if a GR-RS or gateway is needed and if either is actually improving the network performance to the required level.

4-21. **TQ**. The SYSCON is interested in the average TQ of all tracked EPLRS RSs in each NCS community. This data provides an indication of how well the NCS community is tracking the RSs via good connectivity and GR-RS emplacement. The SYSCON monitors the employment of all GR-RSs as reference RSs and the locations of NCS reference RSs chosen from user RSs.

4-22. **Reference RSs.** The NCS operator chooses reference RSs from among the user RSs. The SYSCON-provided data on units using surveyed locations assists the NCS operator in this choice. A SYSCON plot of the reference RSs, combined with the thorough knowledge of the geography and terrain, allows the SYSCON to review the average TQ data to include consideration of other factors that affect the average TQ figure.

4-23. When considering the dynamics of RSs in a stable network, the TQ average will be towards the upper middle of the one to nine scale for active RSs (between six and seven). As the average TQ of a stable network degrades to a five or below, the SYSCON should plan to assist the NCS operator in choosing a more efficient reference RS or to employ a GR-RS. This is dependent on the SYSCON analysis showing that the lower average TQ is primarily due to poor reference geometry and not control network connectivity/capacity.

4-24. During network build or transition of the network, the average TQ may be between four and five. Depending upon the anticipated length of the movement, the SYSCON may intervene to provide either guidance or an available GR-RS.

4-25. Determining the reason for a low average TQ value is difficult for the SYSCON since it may be due to a variety of factors. Some factors include

- Number of active RSs in the network and their distribution.
- Type of RS or report rate.
- Reference RS geometry.
- Control network connectivity.

4-26. By analyzing the performance measures and comparing them with knowledge of the geography, the SYSCON planner determines if a GR-RS as a relay is required to improve connectivity in a certain area. The user of a GR-RS may be required to supplement the network due to poor needline performance to a user or group of users. An important user with critical data or a large number of needlines may have difficulty communicating because there are not enough relays of opportunity to support their needline load. A well-placed GR-RS provides this relay capability, if required.

4-27. As the battlefield moves, the SYSCON reevaluates the positioning of interdivision gateways. The SYSCON plans to accomplish gateway movement at a time that will result in minimal loss in service. If the gateway also serves as a reference or a dedicated relay, that service is also considered in any movement of EPLRS resources.

4-28. **CONOPS Plan.** The CONOPS plan in the deployment phase is considered a living plan. Users can change or modify it as the tactical situation and support requirements dictate because it is a collection of plans to provide CONOPS under any of several potential situations. The SYSCON planner must be fully aware of the tactical situation of the fighting force so that the SYSCON can anticipate the changing support requirements and either modify or execute an existing CONOPS plan.

4-29. The SYSCON conducts a review of the NCS's system tabular before deciding to execute the CONOPS plan for a planned or controlled displacement of that NCS. This provides the SYSCON with the most recent information as the basis for any final adjustments made prior to execution of the plan. For instance, the NCS community that requires displacement of the NCS is plagued with a poor average TQ, long message delay, and low throughput. The SYSCON determines if moving the NCS can solve the problem. If there is another problem, such as poor connectivity to a large pocket of users, the problem intensifies once the CONOPS plan is executed.

4-30. The interim controlling NCS may not be placed to provide maximum connectivity to the adjacent NCS community. Users may be totally out of service as opposed to having only degraded service. The SYSCON may direct that a GR-RS be displaced to alleviate the situation prior to NCS displacement to ensure continued service in the CONOPS situation.

4-31. If there is still a problem, the SYSCON should consider other areas such as numbers of active RSs and active needlines. If the two communities involved in the CONOPS plan exceed the NCS capacity for the total number of RSs or needlines, certain users will lose service. The SYSCON can prevent this in most cases by maintaining a balance in the NCS communities and keeping the CONOPS plan current.

4-32. One of the key considerations in CONOPS planning is time. The SYSCON must determine the best course of action in the time available. A time constraint may preclude resolving a community's connectivity problems before executing the CONOPS plan. This may cause a short-term loss in service to certain users in favor of establishing a better quality of service to all users with the NCS displacement.

4-33. The SYSCON is flexible in establishing the CONOPS plan. Because of the transfer of alternate NCS data, the SYSCON can choose between two NCSs to be an interim controlling NCS. The SYSCON optimizes the choice depending on the tactical situation.

4-34. If the community to be displaced is very large, the SYSCON directs that the displacing NCS community be absorbed into two NCS communities in the interim. This arrangement, although more difficult to control, keeps the entire network more balanced during CONOPS execution. This equates to the interim NCS communities running within capacity limits and a more balanced service to users in the division community.

4-35. **C2 Center Designation**. This capability probably will not be switched often during deployment of the system. The SYSCON and NCS operators, however, must be prepared to accommodate the change of this designation to an alternate headquarters when the primary headquarters displaces.

4-36. **System Center Designation/NCS Reference**. This value cannot be changed without a complete restart of the NCS. Upon displacement of an NCS, the SYSCON provides the system center data for the new area to the NCS operator just as it did in the predeployment phase.

4-37. **Magnetic Variation**. This value cannot be changed without a complete restart of the NCS. Upon NCS displacement, the SYSCON provides the magnetic variation data of the new area to the NCS operator just as it did in the predeployment phase.

4-38. **Outside Temperature Parameter**. The system uses the outside temperature parameter to establish a correction in converting barometric pressure readings into altitude measurements. The closer the temperature entry is to the actual temperature, the more accurate are the altitude readings of RSs. Since the temperature can vary by several degrees over a division area, the NCS operator periodically monitors this entry.

4-39. However, the SYSCON establishes a SOP where the NCS operator, given a thermometer, checks this parameter at least once every two hours or more often if the temperature is changing rapidly. This time frame should keep the temperature parameter within the acceptable margin of error, especially if the NCS operator inputs an expected value for one hour from the time of entry. For instance, if it is 0800 hours and the temperature is 10°C, the NCS operator can input a value of 12°C since the temperature is expected to rise in the next two hours.

4-40. **Date and Time.** Once established in the division community, newly emplaced or displaced NCSs obtain the time as maintained by the division, via a request to another NCS.

Frequency Management/Resource Allocation

4-41. The frequency management/resource allocation scheme cannot be changed once the system is in operation, except to change a frequency channel for a control network TREE allocation, if available.

NOTE: Any change to the communication allocation requires a complete restart of the division EPLRS network.

4-42. As the CONOPS plan is executed, the SYSCON provides the TREE allocation to the displacing NCS. The new TREE allocation must meet the planning criteria previously outlined. The SYSCON must use only approved frequencies and power levels for the area and be compatible with other TREEs in the division community.

COMSEC Planning

4-43. The COMSEC plan follows established EPLRS security procedures in the deployment phase. The operational aspect that SYSCON controls is the exact time of cryptographic key advance. This advance is established weekly and monthly; however, the SYSCON must determine the optimum time to advance the division community network. That time should be after the NCS operators report that nearly all active RSs have been satisfactorily rekeyed when the tactical situation permits.

UNIT LIBRARY

4-44. As the network stabilizes after the initial deployment, the load on the NCS operators in responding to user problems will indicate how well the library was set up in the predeployment phase. The NCS operator's primary job is to maintain the library to support the needs of the users. To do this, the NCS operator should backup the library about every two hours. Backups should be performed more frequently if major changes have been made to the library or if determined changes have been made without notifying the NCS operator. Current positions are saved when the library is backed up.

4-45. The NCS operator should maintain a log book to keep track of all library changes in case of disaster recovery or update a new NCS coming on line with an older library. SYSCON involvement in this area is limited to those particular items that affect a large portion of the network, control of the common database, and results that make up the system performance measures.

4-46. During periods when there are major transitions of the network such as a new battalion moving into the division area, the library has to be updated. A major update may be accomplished by inputs from the SYSCON or by supplying new library tapes to all division NCSs. Listed below are types of data considered in an update.

Access Control Data

4-47. In general, the majority of this data will not change. Upon initial deployment or network build, the NCS operator may be required to fine tune the library if inputs were not recorded in the predeployment phase. During periods when there are major transitions of the network such as the new battalion moving into the division area, the library has to be updated. This new unit is given MILID designations consistent with the MILID allocation and, preferably, in the tactical phone book as well as the appropriate EAE codes to serve its mission requirements.

4-48. **RS ID**. The NCS operator reassigns an RS ID to a particular unit's library entry because that unit uses an RS other than its designated original. This data will not have to be changed if the RS is replaced through a proper maintenance action.

4-49. **MILID**. To remain consistent throughout the fighting force, the MILIDs should not change from the entries in the published tactical phone book. Spares should be used for units that originally were not planned to operate in that area of operation.

4-50. **MILID Allocations**. The MILID allocation must not be changed during operations or complete confusion of unit identification will result.

4-51. **Echelon Assignment**. This data will normally not change since it is tied to the general guidance in SOPs/OPORDs on the assignment of echelon levels to military units. There is no projected reason in the different areas of the deployment phase that would justify changes to this guidance. Any fine tuning of particular access requirements can be compensated for in the assignment of EAE codes.

4-52. **EAE.** As task organizational relationships change on the battlefield, the EAE codes must be adjusted to provide the users with the proper position location access. This information most often comes from the users directly to the NCS operators. The NCS operator filters unusual requests to the SYSCON.

4-53. The SYSCON provides the NCS operators with specific and general guidance in this area. For instance, if an infantry platoon requests to be given access to the brigade echelon, the NCS operator should involve SYSCON in verifying the requirements to avoid a captured RS from gaining wide access to position information. This verification process may take longer, but it is important for operational security (OPSEC).

4-54. **Message Set Authorization**. This library entry in the deployment phase works much the same as the EAE codes. The original message set authorization normally does not change since the NCS operator has the option of granting units a one-time authorization. This procedure should satisfy most requirements. The SYSCON must provide the NCS operators with both specific and general guidance in this area so that wide access to critical information does not result in its compromise.

Display/Control Communications Management

4-55. This data tends to change more than the access control data. However, most of the library remains stable. Upon the initial deployment or network build, the SYSCON and the NCS operators may be required to revise the library in cases where inputs were not recorded in the predeployment phase. Entries such as group assignment, unit home, report rate, and handover eligibility may require modification on an individual basis to meet the changing battlefield requirements of users.

4-56. **SYM/ECH**. This list is established during the predeployment phase and should not change except to add a new symbol associated with the particular operation.

4-57. **Groups**. Flexibility built into the predeployment plan for the assignment of spares to the brigades should avoid any requirement for major changes in the definition of groups. Unit assignments to groups change as their battlefield role or task organizations change.

4-58. **Unit Home**. This entry keeps track of RSs required by specific NCSs. It may change as AOR boundaries change to balance a network. However, it does not detract from the user's service.

4-59. **Unit Type**. This entry will not often change since the type of RS installation drives it.

4-60. **Unit Report Rate**. The SYSCON provides the NCS operators with specific guidance in this area. Since this entry affects the capacity of the EPLRS, arbitrary requests to increase the report rate must be referred to SYSCON. Increases on a temporary basis (as in the case of a manpack RS carried on a helicopter) are handled routinely by the NCS operator if the current control network required is less than 25 percent. Under special deployment, or as terrain circumstances dictate, the report rates of a few specific A-level (and occasionally B-level) RSs may have to be increased to provide added support to a portion of the community.

4-61. **Handover Eligibility**. This entry is originally set based on general guidance of the kinds of units that most likely will transition across NCS boundaries on a frequent basis. This entry may require revision in the library as the network stabilizes following the deployment. It should be used sparingly to avoid confusion as the network transitions through a CONOPS situation.

4-62. **Reference Unit Guidance**. The SYSCON must provide the NCS operators with continual guidance on the surveyed locations and the users who use them. This will give the NCS operator better options for selection of reference RSs.

4-63. **Security Classification Guidance**. There will normally be no change to the security classification entry of RSs. Library changes to this area will mostly be additions and subtractions for units transitioning through the division.

MESSAGE LIBRARY

4-64. As the network stabilizes from the initial deployment, the load on the NCS operators in responding to user problems indicates how well the library was set up in the predeployment phase. As with the unit library, the NCS operator's primary job is to maintain the library to support the needs of the users.

4-65. SYSCON involvement in this area during the deployment phase is limited to those particular items that affect a large portion of the network or control of the common database. The SYSCON reviews the system performance measures that reveal the overall results.

Message Set Basics during Deployment

4-66. The strict control of access to certain data is critical to message sets in the deployment phase. The SYSCON establishes guidance for the NCS operators on the authorization of message set/information requests so that wide access to sensitive data is limited. The guidance should include parameters that determine when the NCS operator should defer a decision for a request to the SYSCON. For instance, if a battalion commander requested the authorization to change one of the NAVAIDS, the NCS operator would involve SYSCON, who in turn would verify the need for the authorization with the appropriate brigade.

Message Set Planning

4-67. The SYSCON plans and adjusts the SYSCON-defined message sets as the requirements of the user community dictate. The spare message sets provide a greater degree of flexibility to the brigades so major changes to the message set plan should not be necessary.

NAVAIDS

4-68. The NAVAIDS portion of the database is very dynamic since certain users are authorized to change the inputs. In most cases, there is minimal NCS operator/SYSCON involvement and planning except to assist the users when necessary and ensure NAVAIDS coordination across the division and with adjacent divisions. To avoid confusing the users, special care is needed to not reuse a message label too quickly.

Notices

4-69. Changes to notices depend upon the type of information in the notice. If the information is the daily password, then it must be changed daily. If the information is a weather report, then it will be changed as often as necessary.

4-70. Authorized users will be responsible for most changes, so the interaction of the NCS operator and the SYSCON to this area is minimal. However, the SYSCON should monitor this area to ensure that authorizations to change notices remain valid and determine if the set-up of notices requires any change.

NEEDLINE LIBRARY

4-71. As the network stabilizes from the initial deployment, the load on the NCS operators in responding to user needline problems indicates how well the library was set up during the predeployment phase. As with the unit and message libraries, the NCS operator's primary job is to maintain the library to support the needs of the users.

4-72. The data distribution on the battlefield and the high degree of usage and interfaces with many different host systems is important. Thus, it is anticipated that among the three libraries, the SYSCON will spend proportionately more time dealing with the needline library.

Needline Basics during Deployment

4-73. The user community keeps needline basics in mind when requesting or establishing (with proper authorization) new needlines. The new needline must be within the RS throughput capacity for currently active needlines and within the RS storage capacity for contingency needlines. The parameters must be input correctly and follow established SOP procedures.

Review of the Needline Library

4-74. The SYSCON periodically reviews the needline library to ensure that the capability to enter new needlines is not being abused and that priority and rate entries do not exceed the limits set forth in an SOP. The SYSCON balances the proportion of the library used among the BOSs. A particular BOS can, over time, build the library with new needlines to the point where other BOSs are limited due to a finite library size.

4-75. Periodically, the SYSCON must conduct a scrub of unused needlines so that they can be deleted to make room in the library for new needlines. RS and NCS operators must carefully coordinate their procedures when deleting needlines. The NCS operator must first confirm that the RS operators at the needline endpoints have deleted the corresponding LCNs before deleting a library entry. To account for dynamic growth, the SYSCON should attempt to maintain the needline library size at a ceiling of 1,800 needlines for the division.

Check/Verify against System Capacity Parameters

4-76. The needline library is expected to change frequently, and the SYSCON cannot be expected to stay on top of the situation at all times. Yet, the SYSCON must maintain the entire needline database so the network can operate within the capacity limits. The SYSCON relies on the performance measures for system capacity to provide an indication of potential needline library problems.

NCS Needline Loading

4-77. Because of the dynamics of the needline library, the SYSCON should monitor this area so that the NCSs are operating within the needline limits of 375 active needlines for CONOPS purposes. Exceeding the 375 number may adversely affect a decision to realign NCS AORs.

NCS

4-78. The NCS provides overall network management, services the operator interface, and monitors reports of network performance. The NCS software functions and capabilities provide the network monitoring and resource allocation support needed to satisfy the communications, navigation, identification distribution, and position location requirements.

4-79. The NCS issues commands to EPLRS RSs to report their status and to submit the communicant data to the NCS that identifies all of the RSs communicating in its AOR. These reports are automatically sent to the NCS, which uses the data to maintain and manage the network automatically.

4-80. The NCS–

- Automatically establishes and maintains the control network.
- Automatically establishes and maintains the communication network.
- Automatically adapts to limited connectivity due to ground terrain masking.
- Automatically adapts to connectivity changes due to user motion and dynamic jammers.
- Automatically assigns time slots, frequency channels, and network resources.
- Determines position and reports location.
- Distributes friendly unit identifications.
- Supports C2 functions.
- Provides corridor guidance.
- Monitors set boundaries to determine penetrations.
- Monitors system performance.

4-81. Figure 4-2 shows the relationship between the NCS, the manual SYSCON, and EPLRS users.

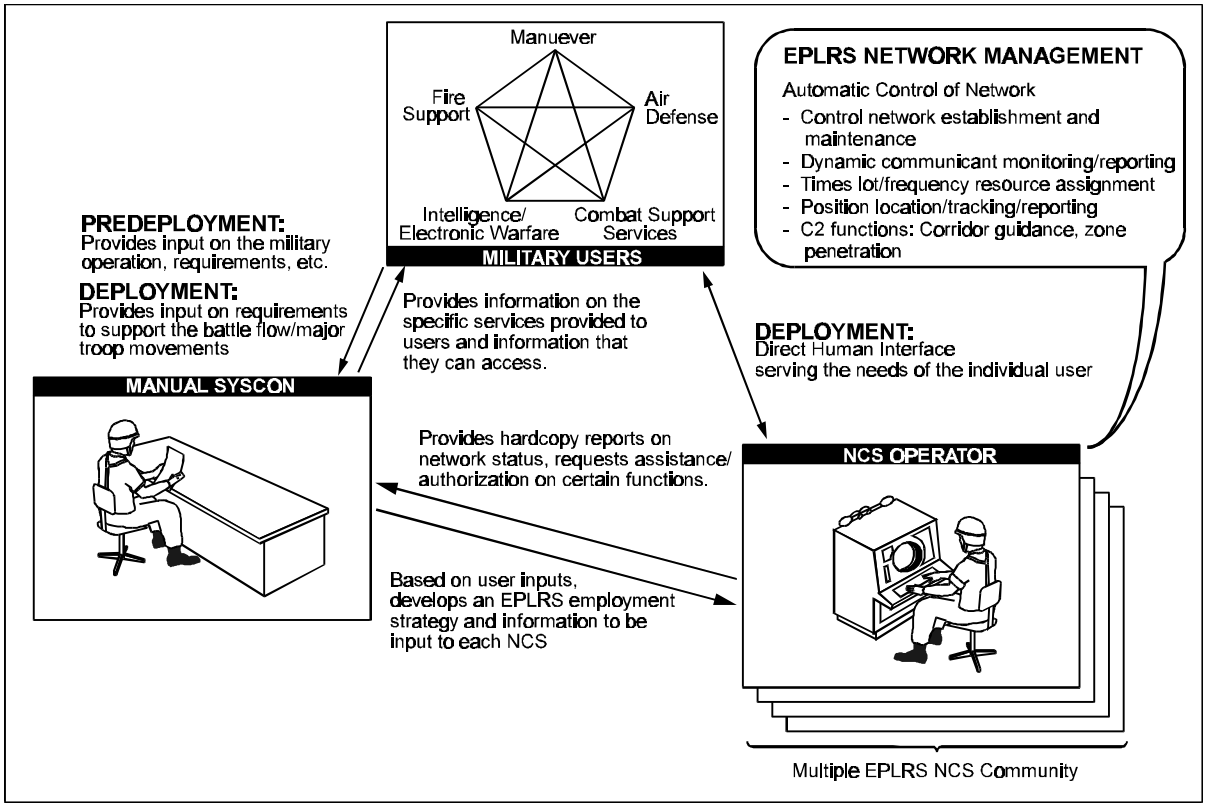

Figure 4-2. Relationship between EPLRS NCS, SYSCON, and EPLRS Users

MANAGEMENT ROLES

4-82. SYSCON planning is common within a multiple NCS community and is managed at the SYSCON level. It includes–

- Time/frequency allocation.
- Geographic deployment and positioning.
- Key management.
- Continuous operations.
- Communications with adjacent or multiple NCS communities.
- Common library of units and communications needlines.

4-83. Figure 4-3 shows a typical multiple NCS community.

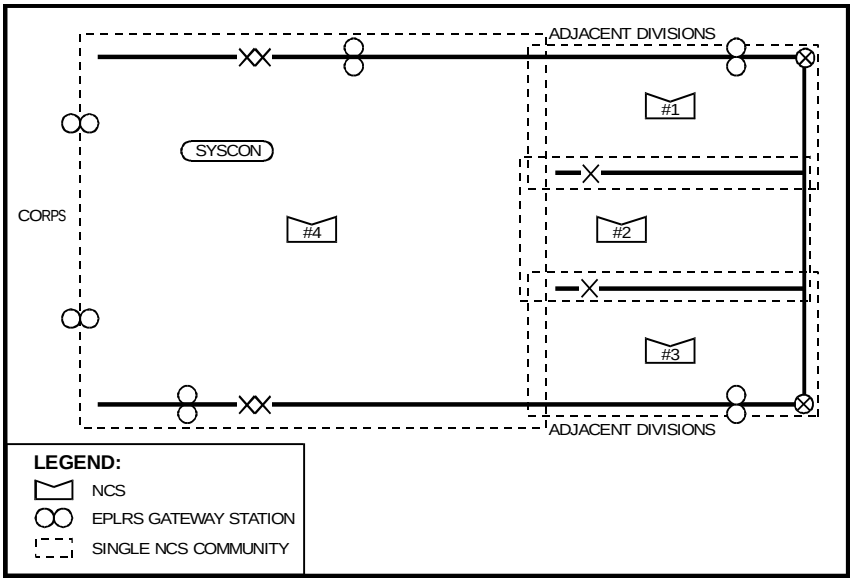

Figure 4-3. Multiple EPLRS NCS Community

4-84. Figure 4-4 shows the role of gateways between adjacent NCS communities. Currently, the interface between the SYSCON functions and the NCS is manual. The SYSCON prepares library tapes for the NCS and receives hard copy printout status reports from the NCS. The SYSCON conducts operational planning, constructs/organizes the library, transfers directives, and compiles status measures from periodic NCS reports.

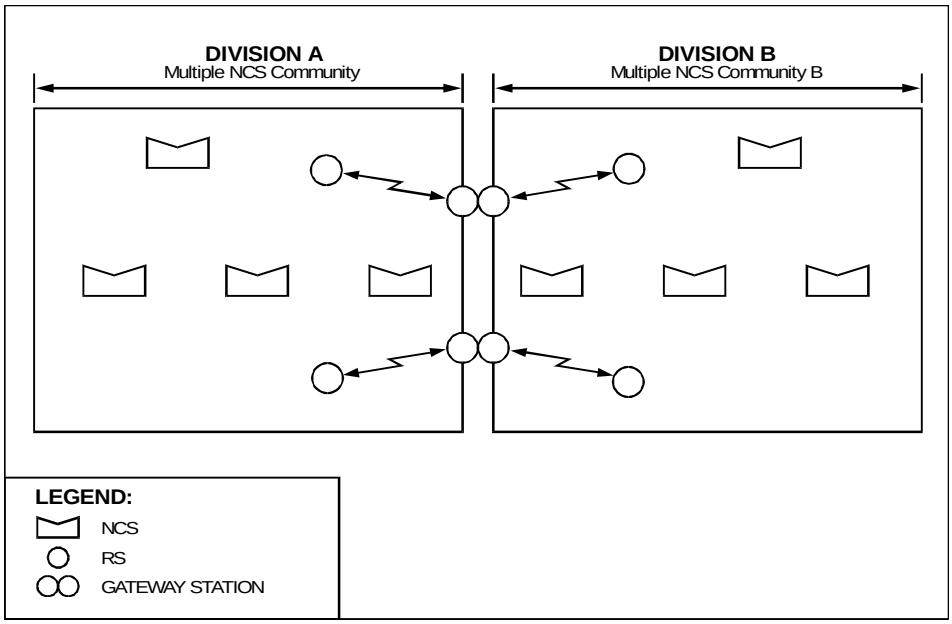

Figure 4-4. Gateways between Multiple EPLRS NCS Communities

4-85. The manual method of performing these functions may be tedious, time consuming, inaccurate, and may fail to take full advantage of the capabilities of EPLRS. The future ISYSCON will provide an automated enhancement to the systems control functions. The ISYSCON will manage the systems control aspects by providing either specific information or authorization to each NCS and furnishing the guidance parameters that support the integrity of a multiple NCS community.

4-86. SYSCON coordinates the data transfer from each NCS to communications users. Figure 4-5 shows EPLRS NCS data distribution within a division and across a division boundary. This data transfer is accomplished via separate needlines from the NCS. Updates of information, such as positional data, identification, and NAVAIDS are provided over a group-addressed needline on the EPLRS communication network to a variety of host systems. ABCS components supporting the functional areas of maneuver, FS, IEW, AD, and CSS will receive this data. The updates allow users to view the location of EPLRS-equipped elements on the battlefield in near real time.

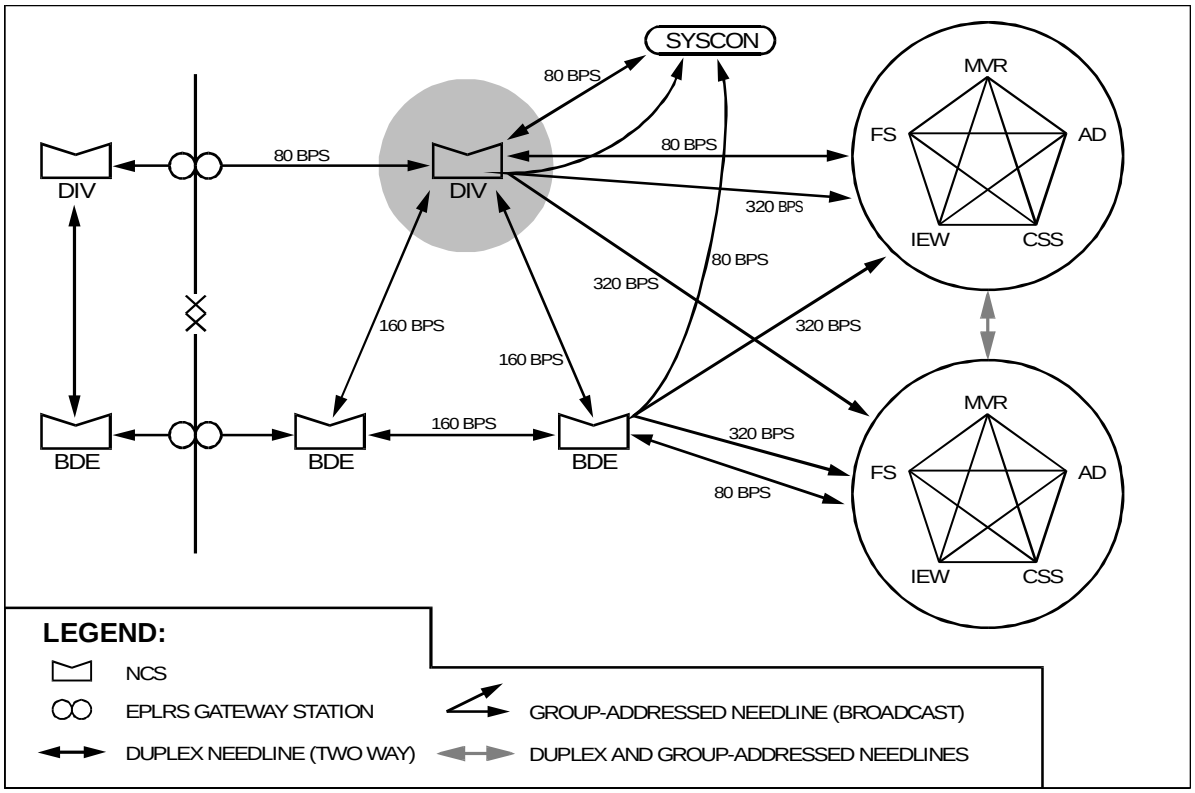

Figure 4-5. EPLRS NCS Data Distribution

4-87. The NCS can accommodate a separate communications link to support direct interaction with a CP. Each link to a CP is a duplex needline that supports two-way communications. The primary purpose for this interaction is to enable the CP to directly change the NCS library/NAVAIDS as battlefield dynamics may require. If several different CPs have access to modify the library, the SYSCON must establish careful procedural control that ensures consistent change within the overall requirement of the operation.

4-88. Each area requires a certain degree of planning, guidance, or other input from the SYSCON (or in the future, ISYSCON), and execution data, updates, and status reports from the NCS operator.

OPERATORS IN SYSTEM MANAGEMENT

4-89. The NCS operator is a communications technical controller for a single community of EPLRS RSs. Automated network management tools allow a single technical controller to readily initialize, operate, and maintain the network under normal operating conditions. The NCS operator manages network start-up, enters parameters and needlines, monitors performance, conducts status reporting, and completes system shutdown. The paragraphs below discuss the three broad categories of operations.

Preparation for Operations

4-90. A multiple NCS community initialization requires one NCS to perform the timing-master-initiate-switch action. All other NCSs in the community are time-synchronized to this NCS. Prior to deployment, the SYSCON designates another NCS as the alternate to perform the timing-master-initiate-switch action.

4-91. Software initialization is not usually a line-by-line series of keyboard entries by the operator. Normal initialization procedure for the operator is to respond to software prompts, either acknowledging or changing information that has already been read into the NCS computers via magnetic tape load.

4-92. The effective use of, and faster service to, RS users require that the NCSs have the correct library tapes before deployment. The NCS operator quickly loads the tapes rather than having to use the keyboard to input all the necessary data. Operators also copy and distribute the tapes as needed to provide a common library that exists across the multiple community.

Normal Operations

4-93. Once the NCS has been initialized and the RS community has settled into a stable network, the NCS operator–

- Monitors the network.
- Responds to free-text messages or advisories.
- Updates the library and foreground map.
- Reports status to the SYSCON.

4-94. During this phase, the NCS operator is essentially in a maintenance mode, watching for signs of potential or existing network problems, handling routine advisories and messages, and entering limited on-line library and map updates. The NCS generates hard-copy printouts of status and library data either for local use or for periodic reports to the SYSCON. Table 4-1 lists the NCS functions and the corresponding operator tasks.

Table 4-1. NCS Functions and Corresponding Operator Tasks

Network Control Tasks	Corresponding NCS Operator Actions[1]
Loads cryptographic keys.	Loads cryptographic keys.
Places the EPLRS NCS on-line.	Performs timing initialization or timing synchronization steps.
Generates maps.	Loads map tape or display map area. Enters display offset or select map scale.

Table 4-1. NCS Functions and Corresponding Operator Tasks (Continued)

Network Control Tasks	Corresponding NCS Operator Actions[1]
Reviews system configuration parameters.	• Enters date and time. • Enters outside temperature parameter. • Allocates resources to include time-frequency allocation and communication channel allocation. • Enters magnetic variation. • Enters alternate and adjacent NCS identification and control center identification. • Conducts communication parameter initialization.

Builds and updates library tapes.	• Loads library tape.
	• Reviews unit library data:
	  • Unit identification.
	  • Type of equipment in unit.
	  • Unit symbol and echelon.
	  • Echelon alias codes.
	  • Message set authorization and group codes.
	  • Report rate and home NCS identification.
	  • Unit type report time and motion filter parameter.

Builds and updates map tapes (optional – not required for system to function).	Enters map line/text/symbol and record map tape.
Reviews and evaluates advisories.	• Reacts to alerts and unit fault indicators. • Reacts to messages and No Track alerts. • Manages unsatisfied needline requests. • Conducts reference quality checks.
Establishes NCS communications.	• Sends message or dispatch. • Enters or deletes adjacent NCS report request. • Requests adjacent NCS date/time data. • Performs manual unit handovers.
Manipulates the display.	Displays tabular data in visual formats.
Collects system data.	Collects and records data IAW) SYSCON/ ISYSCON/ unit guidelines
Shuts down the system.	• Performs EPLRS community handover (AOR reduction). • Makes complete library tape.

SHUT-DOWN

4-95. The organized handover of the RS community to an alternate NCS is the primary function associated with a preplanned NCS shutdown. The NCS operator declares the entire community eligible and reduces the size of the NCS's AOR. This permits the orderly and gradual handover of the supported RSs to the designated alternate NCS without interrupting support to the operation.

4-96. The NCS operator normally makes an updated library tape before starting the shutdown process. An unplanned shutdown results in some loss of EPLRS service to users until the alternate NCS reconfigures the network to absorb a large number of new users in a short period. Host-to-host communication data services continue without disruption during transition between NCSs because each RS operates in the time-synchronization mode during this short period.

RESPONSIBILITIES

4-97. EPLRS network management for the corps, division, maneuver brigade, battalion, and company are discussed below.

CORPS

4-98. EPLRS network management at the corps level supports division requirements. When a corps deployment is planned, the corps SYSCON focuses on multiple NCS communities. This includes–

- Resource allocation to support the corps OPLAN.
- Spectrum management allocation for EPLRS.
- Cryptographic documentation management.

4-99. Close coordination between the signal planning elements at corps and division is continuous to ensure responsiveness of the EPLRS network.

DIVISION

4-100. The division signal battalion has the majority of network management responsibility. The objective of network management is to develop a detailed, flexible signal plan that supports the warfighter. The signal battalion has two elements responsible for network management: the G6 for planning and the SYSCON for system operations.

G6 Planning Management

4-101. The G6 provides–

- Network operational planning.
- Geographic and network analysis.
- Resource allocation.
- System configuration parameters.
- COMSEC management.

4-102. **Unit Library Planning**. This library–

- Provides access control data.
- Manages display/control communications.

4-103. **Message Library Planning**. This library–

- Establishes AOR.
- Establishes message set assignments.
- Establishes navigational aids.
- Notifies NCS.

4-104. **Needline Library Planning.** This library–

- Analyzes user requirements.
- Prioritizes needlines per division SOP.
- Performs system and terminal capacity checks.

4-105. **Network Monitoring.** This includes–

- Network monitoring and adjusting.
- Future movements analysis.
- OTAR planning.

4-106. The G6 section understands the elements of the EPLRS signal support plan and manages user requirements to maximize EPLRS effectiveness. The SYSCON acts on user requirements provided by the G6 and/or other planning information drawn from the division OPLAN/OPORD.

SYSCON Planning

4-107. The SYSCON–

- Develops EPLRS signal support plan.
- Verifies and validates submitted requirements.
- Provides systems engineering based on OPLAN and capabilities.
- Exchanges operational information with EPLRS NCSs.
- Conducts continuous dialogue with the G6 section to ensure user needs are met.

4-108. Most functions of the SYSCON occur before deployment when resources are configured to best support the pending military operation. This planning role continues after deployment and includes monitoring the execution of the plan and the required changes to the plan. Once deployed, the SYSCON, as the focal point for operational planning, uses the system control network. The SYSCON communicates directly with the NCSs and provides overall network management, serves as the operator interface, and monitors reports of network performance.

MANEUVER BRIGADE, BATTALION, AND COMPANY

4-109. The EPLRS users come from the battlefield functional areas (BFAs) of maneuver, AD, FS, IEW, and CSS. These users employ RSs to support mission accomplishment. Each functional area has different requirements and these users must define their needs. This information is input into

EPLRS databases to enable the EPLRS network to support mission requirements. Defining requirements require a basic knowledge of the EPLRS.

4-110. The brigade S6 and battalion S6 must educate the users on the system and describe the type of, and format for, information needed. Largely, this is reduced to unit SOPs. The BSO and the battalion S6 are important players in supporting user needs. Both assist units in developing their requirements and consolidating the input. The battalion S6 passes requirements to the brigade S6s. The brigade S6 validates requirements against the unit SOPs and command authorization, consolidates them, and passes their consolidated requirements to the deputy G6.