Chapter 3

Network Planning

This chapter discusses the signal support plan during the predeployment phase. The signal support plan covers the functional areas of network operational planning, unit library, message library, and needline library. This chapter also discusses COMSEC and key management planning considerations.

PREDEPLOYMENT PLANNING

3-1. The objective of EPLRS network planning as a predeployment task is to develop a detailed signal support plan that is flexible enough to support users conducting operations on a dynamic battlefield. The majority of EPLRS planning and control occurs in the predeployment phase of an operation. If this planning is thorough, it establishes a solid base for EPLRS operation after deployment to the AO.

3-2. System planning and control requires coordination between the functional users and the signal community. RSs are assigned to the user community of units from division and corps organizations. Figure 3-1 shows the relationship of the corps and divisional elements in the planning and coordination process. The key personnel involved include–

- Unit operations officer/commander.
- Corps assistant G6 and SYSCON.
- Division assistant G6 – EPLRS planner.
- Signal battalion SYSCON.
- Brigade and battalion S6.
- NCS operators.

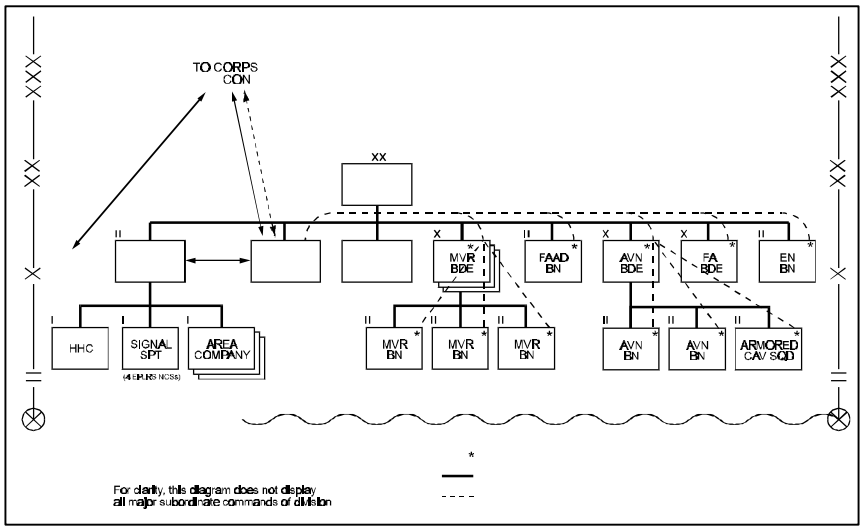

Figure 3-1. EPLRS Planning and Coordination

SIGNAL SUPPORT PLAN

3-3. The SYSCON develops and implements the EPLRS signal support plan through coordination between the users and the signal community. The plan comes from the operation plan/operation order (OPLAN/OPORD) of the division and/or corps, as modified by the signal OPLAN/OPORD and user requirements. The corps and division deputy G6s provide initial planning guidance to the SYSCON. Continuous dialogue between the corps and division deputy G6s and SYSCON staff balances the users' requirements against system capabilities.

3-4. The signal support plan for the signal organization is in the form of system executable directives to the NCS operators. Most of SYSCON's effort occurs before deployment; however, planning continues after deployment and includes monitoring the execution of the plan and making required changes to it.

3-5. The NCS operator is the communications technical controller for a single community of RSs. He responds to the supported users' needs and to the SYSCON. The greatest load is placed on the NCS during deployment. The NCS provides the SYSCON with a periodic printout or status of the NCS community and interfaces with adjacent NCSs as needed.

NETWORK OPERATIONAL PLANNING

3-6. Factors to consider in network operational planning are discussed below. Figure 3-2 shows the layout of an EPLRS signal support plan. See Appendix C for assistance in writing Annex K to the operations order.

Geography and Network Analysis

3-7. **Initial Deployment Strategy**. Geography and network analysis is the first critical step in the planning process. The SYSCON planner determines the initial strategy to support the operation. This includes situations when the commander requires EPLRS services to be available (upon arrival at initial unit locations, at the start of the exercise or alert status, or from port/airstrip to the employment locations). The initial strategy determines how the division allocates its resources. For example, the division could employ two brigades forward. These factors determine the initial plan for the employment of the NCSs and their respective communities.

3-8. For planning and deployment, the SYSCON generates geographical maps for the NCS. When loaded, these electronic maps provide locations of units and NAVAIDS. PDIs can then be visualized relative to the features of the maps.

3-9. EPLRS supports a variety of initial deployment strategies. The commander and the SYSCON planner must weigh whether to provide EPLRS services at the initial rollout or only after the unit has arrived in the AOR. Based on this decision, the plan can employ EPLRS personnel and equipment resources to meet the most critical need.

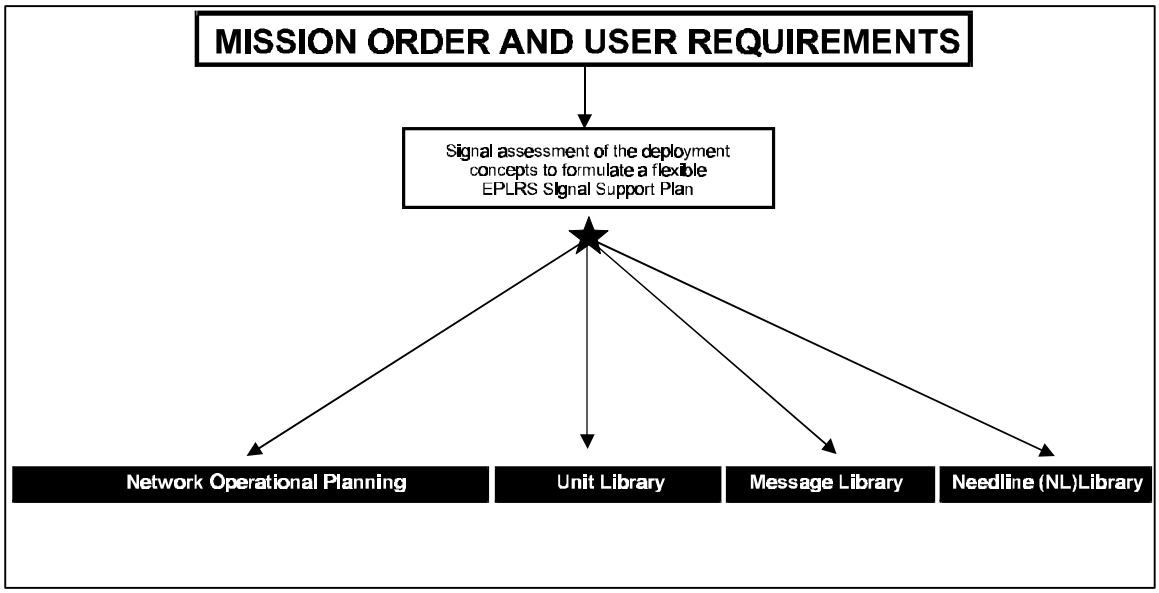

Figure 3-2. Signal Support Plan

3-10. In all cases, the important step is to efficiently establish the initialization plan and deploy the GR-RSs to provide adequate connectivity for position location and data communication. When used to perform this function, the GR-RS is referred to as the EGRU.

3-11. Some RSs may serve as EGRUs in nonsignal units that are suitable for use because they are precisely surveyed into position. Engineer and field artillery units are often good candidates for this, assuming their mission does not conflict with the signal EGRU mission need. The additional EGRUs are assigned to ensure that an adequate number of referenced locations have the accurate grid references to ensure an adequate EPLRS support geometry.

3-12. **NCS Allocation/Placement**. EPLRS NCSs and EGRUs assigned to a division signal battalion support different deployment strategies in various types of terrain. A normal assignment for a division would be three brigades, each with an NCS, and an NCS in the division rear area. If one NCS is not deployable, then one or more NCS will have to cover more than one brigade. This affects the placement of each NCS and the establishment of AOR boundaries.

3-13. A terrain analysis determines the location and general AOR boundary for each NCS and the location of the EGRUs. In many cases, the considerations for the employment of EPLRS equipment are the same as for the MSE system. Therefore, some equipment can be collocated on the same site. However, the employment requirements of the two systems will not allow equipment collocation of the EGRUs and some relays.

3-14. **AOR Considerations**. There is no specific rule that dictates where to place an NCS. Planners can use the guidelines discussed here to place each NCS in a location suitable for network establishment.

3-15. The AOR is entered as message library data. EPLRS AOR may have four to six sides, which form a closed convex polygon. The AOR should encompass the tactical AOR but need not coincide exactly with it. The AOR message library entry defines the geographic limits within which each NCS normally controls RSs and processes their position data.

3-16. With NCS communities, the AOR boundary defines the point at which traversing handover-eligible RSs automatically leave control of one NCS and is accepted into the network of the other NCS. SYSCON coordination must consider adjacent NCS communities when planning the AOR message library entry. Adjacent AORs should overlap slightly (typically, 1 kilometer [km]) on their common side to avoid gaps in EPLRS coverage. This ensures that users on the boundary remain in the net of their parent NCS and that users transitioning to another community experience a smooth handover.

3-17. The EPLRS planner must consider general AOR boundaries that a community has (including contingency plan AORs) when deciding on a location for an NCS. The optimum size of an EPLRS AOR is a 20 km x 30 km area. Within an optimum AOR having a high concentration of RSs for connectivity, many options exist for the system to assign relays. A larger area can be supported; however, a sparse density of RSs and a large AOR limits the automated system options to efficiently configure/reconfigure the network. The careful planning of EGRU utilization to function as both grid reference and relay RSs can alleviate this limitation.

3-18. Within the AOR, the NCS should be placed between half and two-thirds the distance from the forward edge of the AOR and centered from side to side. Figure 3-3 shows an example of an NCS's positioning within an AOR. The positioning is dependent on the terrain and situation. The further the NCS is placed to the rear of the NCS community, the less it supports the units at the forward line of troops (FLOT) (highest density of users). However, a forward-placed NCS is more susceptible to destruction or capture in a combat situation. NCS positioning considerations include:

- Locate an area that has good radio LOS opportunities for surrounding RSs in as much of a 360-degree radius as possible.
- Mask the NCS from the direct jamming threat, where possible, and have adequate cover and concealment.
- Make each AOR side angle greater than or equal to 65 degrees and less than 175 degrees. AORs can have up to six sides.
- Do not establish AORs that intersect zones.
- Shift the boundaries of adjacent AORs, if necessary, to ensure that handovers do not begin while changing zones.
- Shift the AOR so that only one NCS is covering the zone in question or both NCSs can cover the NAVAIDS so that the handover begins after the unit has completed the use of the NAVAIDS. Although lanes and corridors may cross from one AOR to another, users traveling at a high rate of speed may experience some degradation in service (out of net or no position updates) while in transition between the two NCS communities.

NOTE: It is recommended that lanes and corridors normally be planned within AOR boundaries.

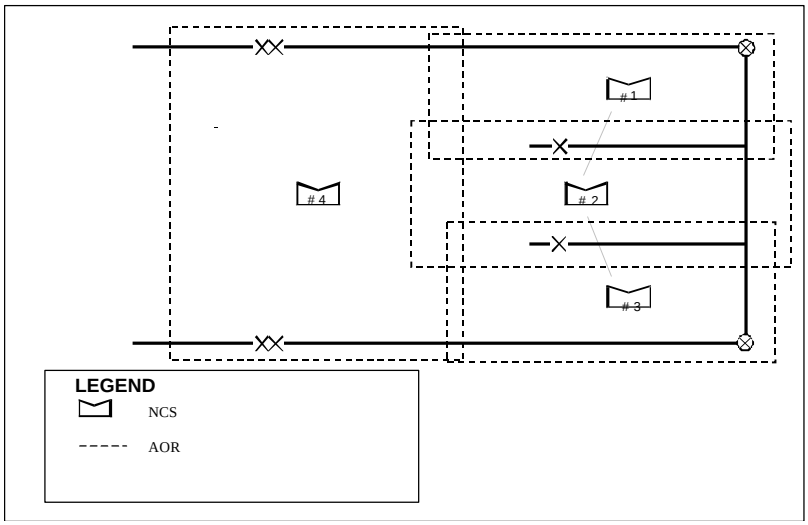

Figure 3-3. NCS Positioning within an AOR

System Configuration and Parameters

3-19. Network establishment and system configuration require key parameters for initialization of the multiple NCS community and each NCS. The SYSCON must carefully plan most of these requirements before deployment. Some are standard NCS operator inputs. Proper planning is important since once the system is initialized, some of the initialization parameters for an NCS cannot be changed without restarting.

3-20. **Master Initialization Plan.** A multiple NCS community (typically a division) is two or more NCSs that have time synchronization and share the same communications resource and cryptographic keys. Master network initialization sets the cryptographic time standard and allocates the communications time and frequency resources within a multiple NCS community. Only one NCS conducts master network initialization. If two NCSs initialize the network, the result can be a total lack of communications between the separately initialized communities. If two separate multiple NCS communities are formed in a division deployment, RSs cannot interact as intended.

3-21. To insure proper communication, perform a cryptographic advance without keying to reconsolidate the network. This causes all RSs in an NCS community to synchronously drop out of one network and become active in the second network.

3-22. All NCSs deploy to their field locations before initialization occurs. SYSCON must designate the NCS with the shortest distance to travel or that arrives at its destination first (division rear NCS) to master initialize the network. The forward NCSs synchronize with the network as they enter it.

3-23. The plan should give an alternate NCS the responsibility for master network initialization if the primary NCS is delayed. This alternative should be carefully exercised and coordinated. Adequate time should be allowed for the designated NCS to acquire network initialization before executing this contingency plan. The alternate NCS normally receives directions via alternate means (very high frequency-frequency modulated [VHF-FM] radio) to begin master network initialization.

3-24. The NCS that initializes in the staging area master initializes the network. The first NCS displaces without affecting synchronization and, on reentering the network at the new location, automatically accepts network initialization.

3-25. As NCSs move by alternate bounds along the main supply route (MSR), they obtain time synchronization from other NCSs already established in the network. The RSs maintain synchronization (track network) once a network is initialized regardless of the availability of an active NCS. NCSs coming on line after this point synchronize to the RS community and must not perform master timing initialization.

3-26. **Number and Location of GR-RSs as EGRUs.** EGRUs function as grid references, dedicated relays, and gateways. Each function has its separate employment criteria to meet a specific need. However, there are overlaps in the employment criteria between the reference, relay, and gateway functions of the EGRU.

3-27. The EGRU employment as grid references or relays is based on the deployment and density of the user RSs over the occupied terrain. This requires planning during predeployment and flexibility to respond to dynamic changes on the battlefield because of user movement. The employment as gateways is based primarily on providing communications needs between two division communities.

3-28. A key consideration in EPLRS planning is the radio LOS propagation characteristics inherent in the UHF band. The RS and NCS transmit in the 420-450 MHz band using up to eight frequency channels. A viable EPLRS network does not rely on connectivity between a high percentage of individual RSs in the network. Rather, RS deployment that provides good area coverage is essential to take advantage of this EPLRS integral relay feature.

3-29. The network's adaptive automatic relay capability satisfies relatively long-range connectivity without requiring each RS to have radio LOS to the destination RS. However, too sparse a distribution of RSs in hilly or heavy foliage terrain isolates pockets of users and results in lower EPLRS connectivity. Good planning and EGRUs can lessen the problems associated with sparse deployment or rough terrain.

3-30. During EGRU site placement, the antenna should have a clear view for radio LOS communications and be away from, and at least 2-4 feet above, any local obstruction. Disperse the EGRUs as much as possible in a small geographical area to maximize efficient automatic relaying. Site placement follows the basic guidelines for any tactical radio system. The site should–

- Increase safety.
- Provide easy logistical support.
- Minimize local interference.
- Provide efficient communications.
- Mask the jamming threat.

3-31. EGRUs supplement as grid reference RSs when the network RSs are not in the most advantageous position for system grid reference. The SYSCON controls placement and movement of EGRUs as grid references. This tasking ensures network maintenance of good GR-RS geometry for highly accurate position location reporting.

3-32. The NCS operator optionally designates any RS as a GR-RS without affecting the RS's capacity to service the user. Certain units make excellent grid references because of the accuracy of their location. These include field artillery and signal units that often locate near surveyed benchmarks. The NCS operator uses GPS data to provide greater flexibility of grid reference locations.

3-33. Positional accuracy improves directly in proportion to the number of accurately positioned EGRUs employed. The ideal grid reference geometry for a community has a redundant series of interlocking equilateral triangles. The limiting geometric factor in determining the position of an RS is the vertex angle formed by lines drawn from the supporting RSs to the RS being located. Vertex angles should exceed 30 degrees where possible. The result of such employment geometry is that the system recognizes two positions for the RS to be located.

3-34. This situation of mirror image geometry can cause errors in position location of 40 or more km. In any deployment of EGRUs, the planning must allow additional EGRUs to be deployed in case of an outage/movement of one or more EGRUs so that a poor geometry condition is avoided. Figure 3-4 shows an example of good EGRU employment geometry.

3-35. It is important to find accurate sources of grid reference location data. Typical sources of grid reference locations include–

- Field artillery survey points.
- Engineer survey points.
- GPS survey points.
- Benchmarks.
- Map-derived identifiable terrain or man-made features.

3-36. The SYSCON must look at the terrain of each NCS community as laid out in the initial deployment strategy and provide EGRUs as grid references upon movement of the force to their initial battle positions. When most units are in transit, the NCS has to rely solely on the EGRUs as grid references; therefore, EGRUs must be deployed rapidly to their assigned positions.

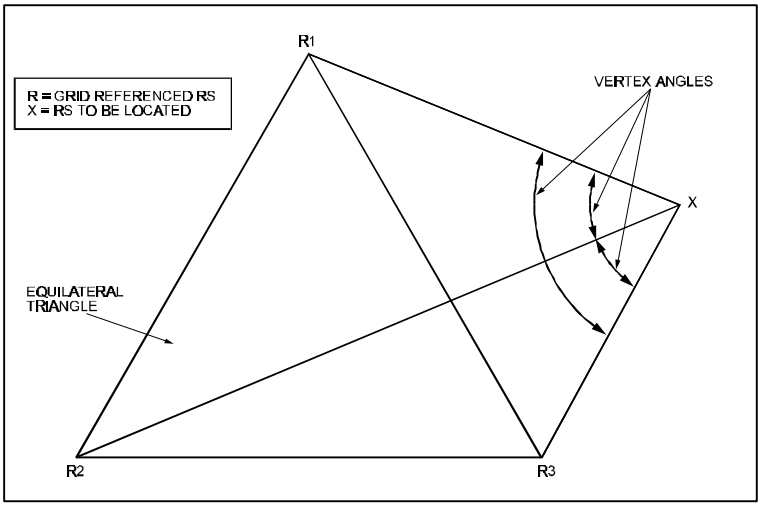

Figure 3-4. Ideal Grid Reference Geometry

3-37. EGRU placement is terrain dependent. Assign between five and seven RSs (GR-RSs and user relay RSs) in an NCS community as EGRUs. By deploying references around the community rather than inside the community, position location and tracking will be more accurate because reference unit covers a larger area.

3-38. Although it is practical to collocate EGRUs with other tactical communications relay equipment to reduce manpower requirements, this may not be possible because of individual system needs. EGRU utilization ensures solid grid reference and relay geometry with the dynamic movement of the FLOT in case of an EGRU outage or movement.

3-39. It is important that the units using RSs assigned as EGRUs maintain the proper cable delay setting for their installation configuration. Changes to the configuration for which the RS or NCS do not compensate cause position errors for the entire community. An SOP requires that the NCS operator check this condition with the RS operator before the RS is assigned as an EGRU.

3-40. EGRUs used as a dedicated relay are employed in areas where terrain may separate pockets of users. The EGRU enhances network connectivity and allows for a more efficient automatic relay assignment for data communications.

3-41. A relatively small number of EGRUs strategically placed as relays significantly improves a network with marginal connectivity. These dedicated relay RSs should also support the grid reference function when their positions are accurately known. EGRUs as relay RSs effectively maintain communication connectivity during periods of enemy jamming. Relay units should not have any needlines assigned. This reduces the number of needlines the EGRU relays for other RSs.

3-42. The planning for EGRUs as relays is terrain dependent and based on obtaining good area coverage, as in a grid reference function. Evaluation of RS densities is also required. In brigade areas, the density of RSs is expected to be higher in the forward areas. The larger number of RSs typically allows for more connectivity unless there are some terrain limitations. In rear areas, the density of RSs is lower, thereby extending the distances between RSs.

3-43. In both cases, EGRUs as relays may be required. When possible, these relay RSs should be established where there is direct connectivity with the NCS. This RS can be assigned as an A-level RS where it cycles at the maximum rate and most efficiently supports the pocket of users for which it is employed. The employment considerations of EGRUs as relays are similar to the MSE radio access units, multichannel relays, and CNR retransmission stations.

3-44. Possible collocation of EGRUs with MSE assemblages or CNR retransmission stations may be a planning consideration. This practice must be carefully considered since the MSE or CNR locations may not be selected for the same system purpose as that of the EPLRS network. Therefore, system relocation times may not be compatible.

3-45. Gateways allow for a communications link between the communities of adjacent divisions. EPLRS intradivisional networks share the same time synchronization and cryptographic keys. Therefore, RSs in different divisional communities are not able to directly communicate with one another.

3-46. Data communication requirements that extend beyond the boundary of a divisional community are established via gateways. Figure 3-5 shows the placement of gateways between multiple NCS communities. Two RSs connected by a cable between their host data ports form a gateway. One RS is a network member of one multiple NCS community, and the other is in the network of the second multiple NCS community. The two RSs exchange information at the baseband so that each gateway RSs can maintain timing and cryptographic synchronization within their own multiple NCS community. Setting up a needline between the source RS and its gateway RS in one multiple NCS community and the destination RS and its gateway RS in another multiple NCS community permits data communications.

3-47. Gateway RSs must be installed between each set of multiple NCS communities where data communications are desired. An additional gateway may be necessary if the needlines through the gateway exceed the capacity of a single RS. Another gateway is required if the needlines required are of two different levels of security classification. An additional deployed gateway may be desirable in case of an outage.

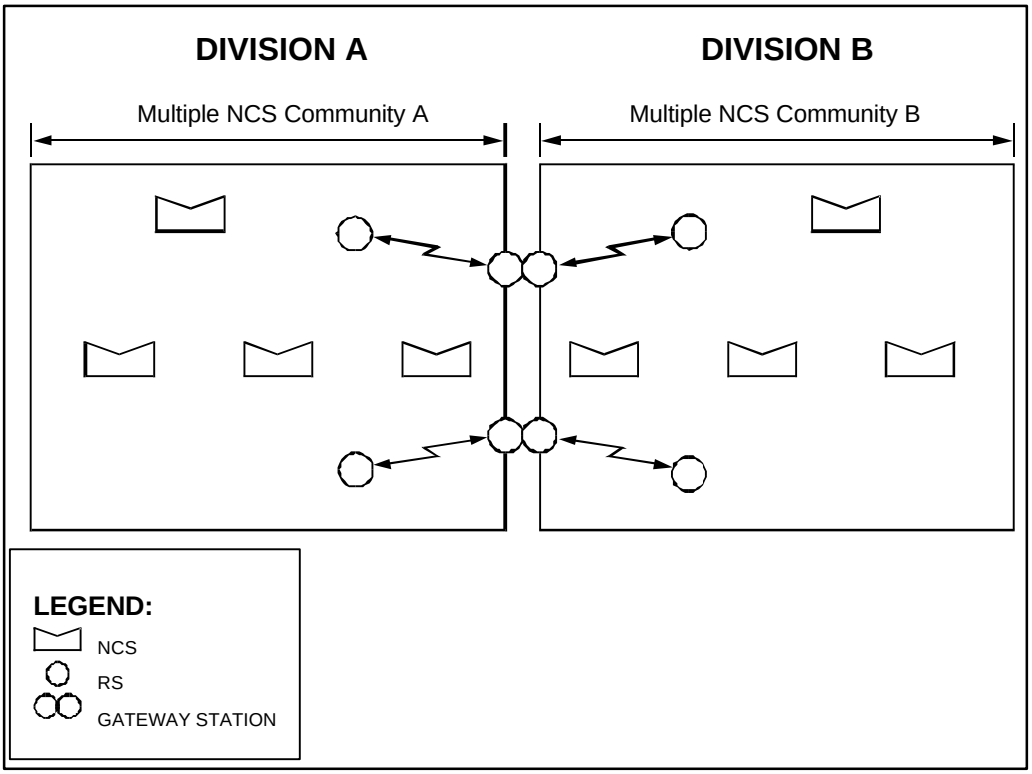

Figure 3-5. Position of Gateways between Multiple NCS Communities

3-48. The SYSCON must conduct a mapping of the LCNs for each needline so that the needlines in each community are sent over the correct path. The LCN on each side of a gateway for each needline must be the same so that the message traffic is sent correctly through the gateway. See Appendix A for a detailed discussion of needlines.

3-49. For SYSCON planning purposes, gateway equipment assignments follow the normal rules for communications support, as outlined in FM 24-1. The support responsibilities that apply are from higher to lower and left to right. In this way, the corps would provide the gateway to the division, and the left division would provide the gateway to each division on the right.

NOTE: The cable connecting the two RSs conveys information in a nonencrypted form (in the clear). This requires that the gateway RSs in operation be physically guarded at all times to prevent the possible compromise of data from both divisions.

3-50. **Continuity of Operations Plan**. The primary objective for EPLRS CONOPS planning is to configure the multiple NCS community network to support the changing user needs on the battlefield. Planning for the EPLRS CONOPS is a function of the SYSCON.

3-51. The SYSCON develops a CONOPS plan based on a thorough knowledge of the users' requirements and the commander's operational priorities. The heart of the plan is the designation scheme for alternate NCSs within the multiple NCS community to provide smooth transfer of responsibilities between NCSs. The plan includes a designation scheme for adjacent NCSs, AOR boundaries of each NCS, common library configuration, and provisions for data distribution. NCS planning considerations for CONOPS include–

- Updates of Library Information. The NCS transfers library information and positional data updates of its units to two designated alternate NCSs. This transfer provides continuity of the network operations in case of an unplanned NCS outage, users transitioning from one NCS community to another, or the displacement of an NCS to support troop movement. The designated alternate NCS assumes network control functions with minimal loss in service to users.
- Role of Adjacent NCSs. Adjacent NCSs play a less active role in CONOPS. The NCS automatically transfers position reports to each of the seven designated adjacent NCSs on RSs that are within 2 km of the adjacent AOR boundary and on other selected RSs. This facilitates the handover process between geographically adjacent NCSs. Each NCS designates up to seven needlines to adjacent NCSs. Two of the designations typically support interdivisional communication (via gateways) for transient unit operations.
- Establishment of AOR Boundary. The SYSCON must carefully plan and adjust the AOR boundary of each NCS as the battlefield changes. This ensures that the integrity of each NCS community and the complete AOR coverage of the multiple NCS community are maintained. This is critical in the planning and execution of the CONOPS plan, as AORs are shifted to maintain or execute the CONOPS plan.

3-52. Within a multiple NCS community, all NCSs share both timing and cryptographic synchronization. The NCSs must also share a common library of unit, needline, and NAVAIDS data so they can accommodate users transitioning from one NCS community to another. For example, as the division commander moves from his headquarters at division main command post (CP) through each brigade area, he receives service from each brigade NCS community. This is possible since each NCS has the required identification/needline data for the division commander in its common library. A solid CONOPS plan prepares for a planned or sudden NCS outage by ensuring that the common library is initially established and then updated as changes are made.

3-53. To ensure that library information and position reports remain common during deployment, a closed loop daisy chain configuration for alternate NCS data distribution is recommended. Figure 3-6 shows the daisy chain flow of information. It provides for data flow from the adjacent NCS through gateways to an adjacent division. Normally, NCS needlines accomplish data distribution between NCSs, but the control network may accommodate the distribution as a contingency back-up. Reassignment of alternate NCS relationships is critical in maintaining NCS database integrity in the division whenever NCSs are displaced or brought out of service. When an NCS has been out of service for extended periods, it may be necessary for SYSCON to provide an updated version of the library by tape.

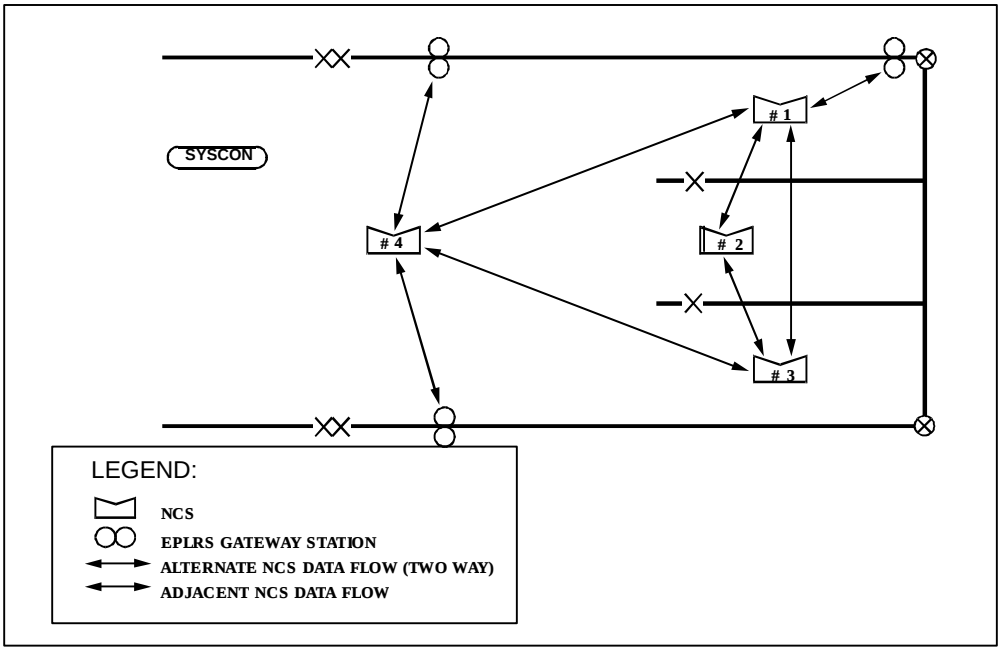

Figure 3-6. Closed Loop Configuration for Alternate NCS Data Distribution

3-54. **Systems Planning Configurations**. The NCS can designate one or more command centers (CCs) for exchanging information. The CC provides support of air and ground battle control measures. The CC, in this control data input role, has a duplex needline assigned and authorization to change NCS library information (NAVAIDS and needlines). The CC uses this needline to exchange free text data with the NCS.

3-55. Careful planning for authorizing multiple CC designators is required to ensure continuity of changes to the overall battle plan. In most cases, multiple CC activities, SYSCON, and other host systems operating in the NCS community have the need to monitor NCS position, needline, and/or NAVAIDS updates. This is accomplished through designation of destinations for the CC group distribution needline. SYSCON and other CC units use this group distribution as feedback to confirm incorporation of data base inputs.

NOTE: If the group needline distribution is not selected, then only one CC node per NCS is connected to the control network.

3-56. This information is expressed in terms of degrees and minutes for both a latitude and longitude entry. This entry focuses the system on a particular part of the world for the purposes of coordinate conversion. Pinpoint accuracy is not required here. All that is required is input approximating the anticipated coordinates for the center of the operation.

3-57. The SYSCON provides this entry to each NCS operator for input to the system upon initialization. The magnetic variation compensates for the difference between true north and the magnetic north reading on a compass. This information is found on military maps in the AO and is expressed in degrees and minutes. In most cases, the entry is the same for all NCSs in the same multiple NCS community. However, the operational area may overlay a transition line where SYSCON would have to ensure that each NCS received the magnetic variation input in its respective area. The transition line would split the AOR or AO.

3-58. The system uses the outside temperature parameter when converting barometric pressure measurements to altitude. The NCS operator enters the temperature (expressed in Celsius) into the NCS from a SYSCON-provided meteorological report or from a local temperature reading taken with a thermometer. It is desirable to update the temperature parameter on a regular schedule.

3-59. The SYSCON designates the time standard for the multiple NCS community as local time or Greenwich Mean Time (GMT). Any NCS can set the date and time for the multiple NCS community. However, for operational efficiency, the NCS that master initialized the network normally sets the date/time standard for other NCSs.

Frequency Management/Resource Allocation

3-60. This is important to the multiple NCS community network establishment to adequately support the overall user communications requirement. The resource allocation for each NCS community must complement the combined allocation for a geographical area to keep mutual interference to a minimum and to maximize data flow.

3-61. The resource allocation in the operational planning stage is dependent on the frequencies available for use by the EPLRS. The highest deployed echelon SYSCON in the operational area coordinates with the appropriate frequency manager (joint, theater, or Army level) for the allowable frequency utilization. This may differ over the entire AO.

3-62. During predeployment, the SYSCON carefully plans and assigns the frequencies for the operation deployment phase. In a typical deployment scenario, the corps SYSCON provides each division SYSCON with a list of frequencies authorized for use in that AOR and any particular instructions. The corps and division SYSCONs produce the control and communication allocations for their particular multiple NCS community. These include guard channel assignment, available subnets, TREE/frequency assignments, and communication/frequency assignments.

3-63. The control network occupies even numbered LTSs. Figure 3-7 shows an EPLRS resource allocation. The shaded area indicates the one frequency channel per LTS that is allocated to a single NCS community for its control network operations.

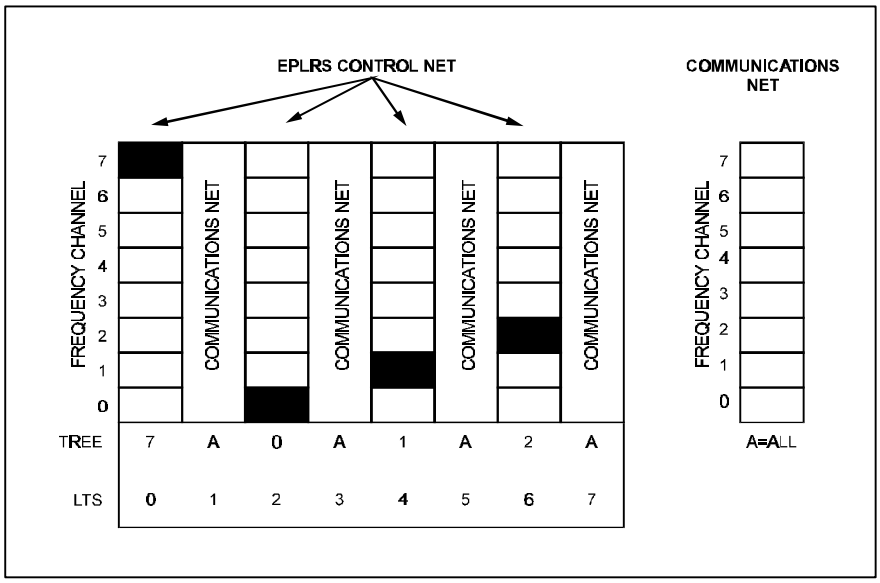

Figure 3-7. EPLRS Resource Allocation

3-64. Each NCS community is allocated a maximum of four LTSs for the control network. A control LTS and a frequency channel identify each TREE. In the hopping mode, all eight frequencies are utilized. Although the channels for the communications network are input separately, it applies to all four communications LTSs. The even numbered LTSs represent a TREE available for allocation. To minimize the potential for control network mutual interference between adjacent NCS communities, the SYSCON must allocate frequency channels from the eight possible channels.

3-65. Normally, NCS operators use nonadjacent frequency channels to ensure minimum mutual interference. A common guard channel must also be assigned to the EPLRS communities that are operating in the same theater. The EPLRS community uses the guard channel to enable RSs to request entry into the EPLRS network and for communication network coordination. To prevent interference with communication network coordination, LTSs 2 and 6 should not use the same channel as the guard channel.

3-66. The communications network occupies the odd numbered LTSs. The communications network requires that all NCSs within a division operate on the same time and frequency resource. One LTS is allocated for group-addressed circuits and three LTSs are allocated for duplex circuits. It is also possible to allocate two LTSs for group-addressed circuits and two LTSs for duplex circuits, or three LTSs for group-addressed circuits and one LTS for duplex circuits.

3-67. The SYSCON of the highest echelon in the operational area must coordinate with the appropriate frequency manager (joint theater or Army level) for allowable frequency utilization. Then the SYSCON assigns the frequencies for the division's communications network operation. If there are no external restrictions, the four nonadjacent frequency channels (either all even or all odd) should be used for maximum performance with minimum mutual interference. In the nonhopping mode, EPLRS uses only the specific frequencies allocated, and in the hopping mode, EPLRS uses all frequencies.

3-68. EPLRS hops across its frequency band to provide a high degree of EP measures against enemy jamming or inadvertent friendly interference. The preferred choice is to operate EPLRS in the hopping mode. This requires the use of all eight frequency channels; all channel assignments are hopped across all eight frequencies. The TREE allocation serves as a guide to the hopping scheme. Therefore, it is important to follow guidelines in establishing the TREEs to minimize frequency interference. If any one frequency is not available for use, then the EPLRS must be established in the nonhopping mode. In either case, to support communications, the hopping scheme (hopping or nonhopping) must be the same throughout the multiple NCS community.

3-69. On the communication network, if all frequencies are available, the four even numbered frequency channels should be input into the system. If only certain frequencies are available, then the maximum number available should be input into the system. Comm LTS Allocation and Comm Frequency Allocation are controlled by one of the following:

- -I user UDIO message to the NCS's enhanced command response unit (ECRU).
- User rapid report (URR) acknowledge (UAK) message that the NCS receives from an existing community of RSs.

3-70. The NCS sets the Comm LTS Allocation and Comm Frequency Allocation of the network. If one RS has received a frequency hop mode setting from the network, the -I message display on the URO sets the QUAL field of the device to H for hop. If the RS has received no setting, the QUAL field is blank.

3-71. Resource allocation considerations within multiple NCS communities following the frequency channel separation rule are important to good network performance. Poor planning of frequency separation in the control network TREEs creates mutual interference between two brigade communities resulting in degraded service to the users. Considerations for planning TREEs within a multiple NCS community include–

- Number of frequency channels available.
- Total number of NCSs in the community.
- Deployment configuration of the NCSs.
- Requirements of the CONOPS plan.

3-72. When all frequency channels are available in the TREE allocations, more combinations of TREE allocations are available to meet all of the frequency channel separation rules. This places less emphasis on the other considerations. As the number of available frequency channels decreases, the TREE allocation combinations also decrease. The SYSCON planner must then allocate the TREEs to NCSs so that the interference potential, based on how they are deployed, is minimized. The CONOPS plan is also a consideration since the resource allocation must be flexible enough to support the dynamics of the battlefield. As a deployed multiple NCS community executes its CONOPS plan, TREEs should be allocated so they are compatible.

3-73. Resource allocation considerations between multiple NCS communities differ from within multiple NCS communities by the use of cryptographic keys separating each multiple NCS community from each other. Therefore, it is not necessary to ensure that the frequency channel separation rules are met between those communities. Frequency interference among multiple NCS communities is possible. However, it is random. Transmissions may scramble in frequency and time so that two of these communities are transmitting at the same time on the same frequency. However, the interference is intermittent, short, and localized to the boundary area and does not seriously affect network performance. The guard channel must be common among all the divisions so that RSs can transition between each division using the transient feature available with EPLRS.

3-74. The allocation of EPLRS resources consists of–

- Frequency channel assignment to the control TREEs for each NCS.
- Assignment of frequency channels to the communication network.
- Time allocation within the communication network.

3-75. While the NCS assigns from one to four control TREEs, there is no advantage to engineering a TREE allocation with less than four control TREEs, even if the frequency channel availability is limited. If network reconfiguration and alternate routing is possible, the automatic network control function compensates for poor links resulting from frequency interference. Engineering the system with all four TREEs gives the NCS this flexibility. Table 3-1 lists the rules for efficient frequency channel assignment.

Table 3-1. Rules for Frequency Channel Assignment

Among the TREE allocations for the multiple NCS community, the channel in each time slot should be different to prevent two channels (CHAN) from using the same frequency (FREQ) at the same time.

EXAMPLE:	CORRECT FREQ CHAN	INCORRECT
TREE ALLOCATION 1	0-4-2-6-	(1)-2-(3)-4-
TREE ALLOCATION 2	2-6-0-4-	(1)-4-(3)-6-

Within each NCS TREE allocation, spread the frequency channels across the available band to avoid signal bleed-over between channels.

EXAMPLE:	CORRECT FREQ CHAN	INCORRECT
TREE ALLOCATION	2-6-4-0-	2-3-2-3-

For adjacent NCSs among the TREE allocations for the multiple NCS community, the channel in each time slot should be separated by multiples of two channels where possible. This minimizes channel interference in the hopping mode, since each even frequency channel sometimes are adjacent to each odd channel. The incorrect allocation below has only one channel separation.

EXAMPLE:	CORRECT FREQ CHAN	INCORRECT
TREE ALLOCATION 1	(1)-(2)-(3)-(4)- (2 channel separation)	1-2-3-4-
TREE ALLOCATION 2	(3)-(4)-(5)-(6)-(2 channel separation)	2-3-4-5-

When no external frequency limitations exist, the following control network TREE allocations are recommended for use within the division:

1st NCS	2nd NCS	3rd NCS	4th NCS	5th NCS	6th NCS	7th NCS
0-6-4-2-	6-0-2-4-	4-2-0-6	2-4-6-0-	0-4-2-6-	4-0-6-2-	2-6-0-4-

Table 3-1. Rules for Frequency Channel Assignment (Continued)

Selection of frequency channels for LTS 2 and 6 should avoid use of the guard channel frequency and maintain a two-channel separation from the guard channel frequency. However, frequency selection rules outlined in 1-4 above should take precedence.
There is generally no reason to change the control network frequency allocation once a division's libraries are in place, except when transferring an NCS to support a different division.

3-76. The NCS must establish direct connectivity with a sufficient number of RSs and assign them as A-level RSs. This is important to the control network build and configuration. Each assigned TREE allows the NCS to assign up to four A-level RSs each, with an assigned update rate of once each second (64 times an epoch).

3-77. Different combinations of B-, C-, and D-level RSs are automatically constructed in a hierarchical fashion from each A-level RS depending on many factors, including connectivity and assigned RS update rates. The more A-level RSs that an NCS can assign within the limits of the TREE allocation, the more efficiently the automatic network control function can configure the network. This depends upon actual connectivity of RSs to the NCS.

3-78. Through planning, terrain analysis, and knowing the deployment of supported units, the SYSCON planner obtains a picture of A-level availability and plans EGRU placement to maximize the number of A-level RSs. The NCS tries to assign as many A-level RSs as possible. If the number of A-level RSs falls too low during operation, EGRUs can enhance network connectivity.

3-79. In the terrain analysis portion of the planning stage, the SYSCON planner chooses, where possible, EGRU locations that ensure good connectivity with the NCS. The NCS operator conducts LOS path profiling or uses area connectivity charts or shadow maps to accomplish this. The SYSCON network planning tool (NPT) or the MSE system control center (SCC) provides these charts or maps.

3-80. The planner should identify at least 16 potential RS locations (matched with the planned user deployment) that serves as A-level RSs. If possible, the planner should identify more since the actual user locations may change from the original plan. However, the user deployment may not support an adequate build of A-level RSs; therefore, the planner must supplement them with EGRUs as dedicated relays.

3-81. Since the A-level RSs form the foundation to build B-, C-, and D-levels, the heaviest concentration of A-level RSs should be towards the greatest user density. Therefore, the plan should disperse a majority of A-level RSs toward the front of the AOR. Include A-level assignments in the rear and sides of the AOR. This allows the EPLRS network to build the A-, B-, C- and D- levels radiating outward from the NCS towards the AOR boundary.

3-82. The allocated communication frequency channels must be identical for all NCSs in the multiple NCS community. When there are no external frequency restrictions, the four even frequency channels (0, 2, 4, and 6) should be allocated for communications.

3-83. The NCS that performs the master initialization establishes the communications frequency channels that the entire multiple NCS community will use. Having a common allocation at each NCS avoids confusion.

3-84. The EPLRS allows each multiple NCS community (typically an Army division) to select the relative amounts of time resources allocated to group-addressed or duplex needline support. Most divisions are set up with equal resources allocated to group-addressed (G) and duplex (D) needlines. This is sometimes referred to as GGDD, or a 2:2 communication LTS allocation. However, either a GGGD (3:1) LTS allocation or a GDDD (1:3) LTS allocation can be made for a division that has a heavy usage of either group-addressed or duplex needlines, respectively.

3-85. The master NCS of the division's community sets the communications LTS allocation, along with the communications frequency allocation. The allocation is distributed to each NCS and RS as it enters, or reenters, the community.

3-86. Each RS maintains these allocations as long as the RS remains synchronized to an ongoing community, whether or not the RS remains under the control of the original NCS. The allocation must be common for the entire division and cannot be changed after community initialization except by a restart procedure, which would interrupt any ongoing operation.

3-87. Each NCS can selectively set one of four transmission power levels for itself and for its RSs. These power levels are–

- Low (0.4W).
- Medium-Low (3W).
- Medium-High (20W).
- High (100W).

3-88. The NCS operator can set the entire community at the same power level or selectively set individual RSs at different power levels. Unless otherwise specified by the NCS operator upon system initialization, the system default value for the entire community is high power.

3-89. The SYSCON planner provides the NCS operators with direction on the setting of the power level on a community wide basis and guidance on selectively changing power levels for individual RSs. Considerations affecting power level selection are vegetation, RS density/distances, and the EW jamming threat.

3-90. At the higher power levels, an improvement in network performance is expected. The threat of enemy ECM (interception and jamming) increases with higher power levels; but with EPLRS, that threat is greatly reduced. The enemy is most likely to use ECM techniques to locate and identify units in the forward area. Thus, the Army uses the lowest power level required for communications, then increases it as needed.

3-91. EPLRS, TDMA technology, short bursts of data, and frequency hopping have greatly reduced the potential enemy ECM, thereby allowing the use of a higher power level without increased risk. (A detailed description of COMSEC is discussed later in this chapter.)

UNIT LIBRARY

3-92. The unit library of the signal support plan has inputs that adapt the force structure and control information to the EPLRS. The scope of this effort is large, but if coordinated correctly with users and set up properly in the database, it will be beneficial once in operation. The planning in this area is critical since it establishes the basic control network services, which include–

- Who the users are.
- What information they can access from the system.
- Whose position information they can access.
- What the RS update rate is.
- Who has handover eligibility.
- What groups are included.

3-93. The SYSCON obtains a majority of the basic information that it needs to establish the unit library database through the lines of communications planning and coordination. The information could be OPORDs, SOPs, supply/maintenance registers, or signal operating instructions (SOIs). The SYSCON must create the library when planning the first EPLRS deployment. In subsequent deployments, the SYSCON modifies the library to tailor it to required changes.

Access Control Data

3-94. Issues dealing with access control data are discussed in the following paragraphs.

3-95. **RS Identification (RS ID)**. This is a hex code that is electronically set into the RT hardware. The maintenance personnel change this code or the brigade S6 sets or changes this code before loading cryptographic keys into the RT. Table 3-2 lists the RS IDs and range.

Table 3-2. RS ID

Unit	ID Range
RT	“0001” through “3DFF”
Pseudo units	“3E00” through “3EFF”
PDIs	“3D00” through “3DFE”
ECRUs in the NCSs	“3F01” through “3FFE”

3-96. **Theater Unique Code**. This code should be unique to the theater. Each RS automatically reports this code to the NCS when it transmits, and the EPLRS recognizes it for RS identification. The NCS software then associates the RS ID with the MILID, unit type, access controls, and other information that is located in the NCS library.

3-97. With the first deployment, SYSCON receives the RS ID number with associated data from the user community for input into the system. SYSCON then establishes a procedure where it receives feedback from the maintenance channels on any changes to RS ID numbers and from the user community on any swapping of RSs while the system is not deployed. This procedure should be set up in a SOP that tailors it to the specific command.

3-98. The person loading the initial key encrypting key (I-KEK) must verify that the RS ID is correctly associated with the military unit that is to use the RS. When replacing a RT, maintenance should erase the RS ID of the RT being removed and give the replacement RT that RS ID.

3-99. Tables 3-3 and 3-4 show a typical allocation of how the RS IDs would be assigned over an entire theater. Table 3-3 shows the range of RS IDs allocated to each division. Table 3-4 shows the RS IDs the division G6 assigns for each organization.

Table 3-3. Typical RS ID Allocation per Theater

Theater Elements	RS ID Range	Total	Theater Elements	RS ID Range	Total
Division A	0001-07FF	2047	Division B	0800-0FFF	2048
Division C	1000-17FF	2048	Division D	1800-1FFF	2048
Division E	2000-27FF	2048	Division F	2800-2FFF	2048
Division G	3000-37FF	2048	Corps/Theater	3800-3CFF	1280
PDIs	3D00-3DFF	256	Pseudo IDs	3E00-3EFF	256
NCSs	3F01-3FFF	255			

Table 3-4. Task Organization Allocation per Division

Task Level Organization	RS IDS		Total	Per Bde (4 Bde/Div)	Per Bn (4 Bn/Bde)
	Start	End			
Division (Div)	X001	X0FF	255	N/A	N/A
Brigade (Bde)	X100	X1FF	256	64	N/A
Battalion (Bn)	X200	X3FF	512	128	32
Company (Co)	X400	X5FF	512	128	32
Platoon (Plt)	X600	X7FF	512	128	32

3-100. **MILID**. The MILID is an eight-character military element identifier to which a particular RS is issued. This identifier is associated with the RS ID for recognition by the system for EPLRS services. Once established, the division or corps RSs' MILIDs are treated as permanent designations and recorded in the tactical phone book along with the unit's full military designation and MSE phone number. This achieves a certain degree of consistency from one tactical operation to the next, since both the unit's MILID and phone number remain the same.

3-101. The EPLRS eight-character MILID code can be divided to represent a unit. Normally, this division, which is referred to as MILID allocation, follows the military echelon hierarchy.

3-102. **MILID Allocation**. MILID allocation is a definition for the EPLRS computers in which fields of a MILID represent echelons of command and identify the access authorization. The typical abbreviation 1/A/l/66/l/20 represents the military organization of 1st Platoon, A Company, 1/66 Battalion, 1st Brigade, 20th Division. This common procedure is a MILID field allocation. EPLRS MILID allocation allows the SYSCON to define to the system which fields of the eight-character MILID represent echelons from one to eight.

3-103. The SYSCON accomplishes MILID allocation during the planning for the initial EPLRS deployment in conjunction with the establishment of the MILIDs. It sets a standard for the military organization designation that it services. Units should not change the MILID allocation from exercise to exercise since they may also have to change MILIDs to support the new allocation, thereby creating confusion.

3-104. Thoroughly plan this activity to arrive at a standard that best meets the needs of the supported organization and do not change it unless absolutely necessary. To properly plan for this allocation, the SYSCON planner must know the basics of how it works and its interrelationships to other areas.

3-105. Since the MILID allocation field establishes how the MILIDs are constructed, consistency throughout the corps organization is desirable. For example, if a corps unit was attached to a division during the course of a military operation and the MILID allocation was the same, the corps unit could be added to the division library without changing the unit's MILID. If the MILID allocation between the corps and division were different in that same situation, the SYSCON would have to change the unit's MILID to fit the division's allocation scheme. This is confusing and inconsistent since this new MILID is not in the phone book.

3-106. At a minimum, since the library for a multiple NCS community must be common, the MILID allocation and MILID scheme within a multiple NCS community must be the same. Although it is not necessary for the MILID allocation and MILID scheme to be the same within the multiple NCS communities in a corps, it is desirable.

3-107. **Echelon Assignments.** Each echelon that is specifically chosen to be represented in the MILID allocation occupies a SYSCON-designated portion of the eight characters. Therefore, all eight echelons can be represented, each with one character, or one through seven echelons can be represented with different combinations of the eight characters. Most military organizations above company level require two or more characters for identification; therefore, the number of echelons represented in the allocation will be less than the full eight.

3-108. **MILID Clarity of Understanding**. The planner must consider that in determining the allocation, it is more important to ensure MILID clarity of understanding in the higher echelons of brigade and battalion level. Therefore, more spaces in the MILID should be allocated to those echelons.

3-109. For example, within the list of units in a division, there may be a company with a three-digit designator, such as the 319th Company of the 143rd Ordnance Battalion, 21st Brigade. In the actual MILID allocation, it is desirable to keep the company (echelon 2) to one or two digits so that there are sufficient spaces to fully identify the battalion and brigade. With a MILID allocation of 1142, the MILID may be: –|3|1-4|21. With a MILID allocation of 1322, the MILID may be: –|319|43|21. With just two characters to designate the battalion, the "43" may confuse users as to whether it refers to the 43rd ADA Battalion or the 143rd Ordnance Battalion.

3-110. Any abbreviations required from the actual designation to the MILID should be at the lower echelons where the impact is not as great and the parent unit is more aware of any disparity. Also, any abbreviation at the lower level can be easily deciphered using the tactical phone book that has the actual unit name with the MILID in a list. Compliance with the guidance in the previous paragraph completes the first step in establishing the hierarchy of MILIDs. This consists of assigning an echelon to each MILID in accordance with (IAW) the MILID allocation. Knowing the rules behind the echelon scheme, the planner can more precisely tailor the hierarchy to the force structure with an alias-echelon assignment.

3-111. **Echelon alias echelon (EAE)**. When it is necessary for a unit to receive position data on units outside its normal chain of command, or for that outside unit to receive position data from its command, it is possible to assign it an alias MILID and an alias echelon. Depending on the desired result, an alias MILID may be the same as an already existing actual MILID, or it may be fictitious.

3-112. **Standardized Packages.** For efficiency in the operational procedures, standardized packages of message sets are allocated to users based on their echelon, mission, and branch. Exceptions can be granted on an as required basis through the S6 channels. The SYSCON enters into the unit library the standard package with any approved exceptions.

3-113. **Message Set Authorization**. Data assignment to message sets manages the dissemination of EPLRS data to RSs over the control network. Individual units are authorized only the specific message sets that contain the data for which they are to be granted access. See Appendix B for a detailed discussion of message set authorization.

Display/Control Communications Management

3-114. During this planning phase, SYSCON develops the unit library data that affects the data display in the NCS, the control of RSs for network management functions, and the distribution of output messages. Units can alter all data entered into the unit library during operation. Some categories, however, rely on consistency throughout the user community and should not be changed. Listed below are some management factors.

3-115. **Symbol/Echelon (SYM/ECH)**. This list controls the generation of the military symbology displayed on the NCS display control console (DCC) for each RS. The SYM element defines the symbol. For example, an infantry unit SYM entry would be INF, and artillery would be ATY, accompanied by the associated military symbol. The ECH element describes the unit size and indicates whether the symbol is for a unit or headquarters. For example, a company-sized unit ECH entry would be CO, and a brigade-sized headquarters would be BD. Refer to Appendix D for the symbology available and the associated SYM/ECH unit library entries.

3-116. **Groups**. This group in the unit library may be used to affect both the display of RSs to the NCS operator and the distribution of outgoing free-text (F) messages to RSs. Up to eight groups, designated A through H, can be assigned to the common library. Groups may be designated to reflect different tactical organizations. For instance, Group A might be all units in contact, Group B might be reinforcements, Group C might be FS units, and Group D might be signal, relay, or reference units.

3-117. An RS can be a member of more than one group. The NCS operator enters the group or groups to which an RS is assigned in the individual RS unit library entry, which is changeable to reflect changing tactical relationships. The NCS operator can display or print out data on RSs by groups or send free-text messages to all RSs in a selected group.

3-118. In the predeployment planning phase, the SYSCON determines the arrangement of the groups for input into the initial library tapes. Some flexibility is desired. The SYSCON may not want to initially use all group allocations. The SYSCON could allocate some for divisionwide use and then assign three allocations for exclusive use by each of the brigade NCSs. Alternate spare groups may be used at the discretion of the NCS operator to facilitate monitoring of potential A-level RSs, EGRUs, and gateway RSs.

3-119. **Unit Home**. Each RS has a home NCS designation that planners assign during the NCS allocation in the network operational planning phase. When an RS enters the network, the NCS that first receives its communications establishes control. If a home NCS is designated and the acquiring NCS is not the designated home NCS, then the system attempts to handover that RS to its designated home NCS. This ensures that an RS does not have to rely on its home NCS to enter the network, yet provides for advance selection of a controlling NCS within a multi-NCS community. Since EPLRS CONOPS may call on any NCS to control any portion of the division, the use of the home NCS designation should be used only in special cases to establish which NCS is controlling an RS.

3-120. **Unit Type**. This refers to one of five RS configurations. They are the–

- Manpack unit (MPU).
- Surface vehicle unit (SVU).
- Auxiliary ground unit (AGU).
- Airborne rotary wing unit (ARU).
- Airborne fixed wing unit (AFU).
- Unknown (UNK).

3-121. The unit-type designation distinguishes the particular installation kit that accompanies each configuration and the default REPORT RATE in the unit library. It also establishes the filter parameters that the NCS uses for position location corrections.

3-122. **Unit Report Rate**. The RS report rate influences the rate of response to requests from the RS's user. The rate is entered into the library as the number of RS reports per epoch. The report rate can be set from between once per epoch to a maximum of 128 times per epoch. The RS report rate, totaled for the system (active RSs), is directly related to the system capacity. Exceeding the EPLRS RS report rate capacity forces the system to cycle each RS slower than its designated rate. NCS communities have a higher potential of exceeding EPLRS system capacity when it has one of the following:

- High percentage of airborne rotary wing-radio sets (AR-RSs).
- High percentage of airborne fixed wing-radio sets (AF-RSs).
- Increased report rate on many RSs from the default value.

3-123. In developing the initial library tapes, the SYSCON planner sets the report rates for all RSs based on either default values or specific unit requirements. To ensure that the RS report rates selected are within the system capacity for each NCS, the SYSCON planner must calculate the totals for each NCS.

3-124. RSs that have multiple needline requirements should have an assigned rate at least half the number of needlines, up to a maximum of eight. Since the system entries for report rates are in powers of two, (1, 2, 4, 8, 16, etc.) report rate entries based on numbers of needlines should be rounded up to the nearest valid entry up to eight. For example, if the FAAD battalion has six needlines, their report rate should be set to four. If a field artillery (FA) FDC has ten needlines, then the report rate should be set to eight. This allows the unit to cycle faster than it would with normal default values so that its needlines are built and serviced faster.

3-125. Commands to establish and maintain a needline occur over the control network so a higher report rate speeds this process, especially with numerous needlines at an RS. The planner must follow this guideline with discretion. For instance, a user may have eight needlines; however, if the type of communications is not critical, then their report rate should be set at the default value.

3-126. If the planner anticipates that a unit requires a high control net data load–in particular when the UDIO port is connected to an automated device–then the planner should increase the report rate above the default value. Specifically, the planner should set the report rate to provide sufficient control net capacity to respond to the rate of the user requests.

3-127. The assigned report rate for such RSs should be at least equal to half the peak traffic generation rate, up to a maximum of eight. The RS report rate based on control net data traffic must be rounded up to the next valid power of two (maximum of eight). For example, if the planner expects a user to generate six data requests per minute, then he should assign an RS report rate of four. If he expects the user to generate twelve data requests per minute, then he should assign an RS report rate of eight. The planner must also follow this guideline with discretion, since the projected community update rate must be within the capacity of the NCS.

3-128. Relay units that provide control net communications to and from the NCS should have a higher assigned report rate than similar units without the relay obligation. The recommended rate is 32.

3-129. If the relay unit is providing communications assistance for a significant section of the community, the planner may recommend that the NCS operator use SUGGEST or FORCE programmable organization for reciprocal transaction (PORT) link assignment (PLA). This allows higher rate control net links to the relay unit. The planner must use discretion when setting such higher report rates or using the SUGGUEST or FORCE PLA functions to ensure that control capacities are not exceeded.

3-130. Since it cannot be determined how many RSs within an NCS community will be active or passive at a given time, sizing for the entire community of RSs is recommended. Using the unit-type that the SYSCON recorded earlier makes this task easier. If units have update rates that differ from other units of the same type, the planner should total those units based on their update rate.

3-131. **Handover Eligibility**. This entry controls the automatic handover of those users' RSs that traverse the AOR boundary between the controlling NCS and an adjacent one. The SYSCON must indicate in the library-building process that an RS is either handover eligible (E) or ineligible (I).

3-132. RSs should remain handover eligible except in special cases. For example, EGRUs that are utilized as grid references and situated on the boundary of or in another AOR should be handover ineligible so that they will continue to operate only in the intended NCS community.

3-133. Handover eligibility should be given to those units whose communications must be supported in several AORs. Typically, this includes units whose missions frequently take them across AOR boundaries, such as helicopters, the division commander, and certain elements of CSS units. The NCS operator can easily change this entry once the system is in operation.

3-134. Therefore, it is not critical that the SYSCON planner micromanage the handover eligibility assignment of every RS. The general guidance and any specific requirement of which the planner is aware is sufficient to establish the handover eligibility assignment in the library.

3-135. **Reference Unit Guidance.** In reaching the target of between five and seven reference RSs in each NCS community, the SYSCON must conduct some detailed planning. The EGRU resources alone are not sufficient and are not intended to provide the needed grid reference coverage, so the system must rely upon other military units as grid reference units (FA and engineer).

3-136. It is difficult to plan on exactly where the units will eventually locate once deployed. Thus, the NCS operator must have the knowledge of planned locations of units to be used for grid reference and the flexibility to change or relocate the grid reference units when necessary. If there are few, or any, units on surveyed points, the NCS operator can choose one of the following:

- Units in the required area that have an excellent (9) track quality.
- Units that can verify its exact location using external data such as a GPS set.

3-137. As a predeployment task, the SYSCON should obtain a list of units and their locations to identify potentially good grid references or identify which units are equipped with a GPS set. This enables the SYSCON to designate potential candidates for the NCS operator to use upon deployment. The NCS operator can use this list to assign all reference units or potential reference units to a group assignment, thereby providing easy access to these units.

3-138. **Security Classification Guidance**. Each RS is handled as confidential on the control network and is keyed either as confidential or secret on the communications network. The SYSCON must manage the overall assignment to ensure that RSs are designated for loading with the proper level of keys. A published list on a unit library printout obtained from information received through deputy G6/S6 channels and verified through G2/S2 channels manages the distribution of cryptographic keys more efficiently.

MESSAGE LIBRARY

3-139. This library has data that pertains to the military operations, such as corridors, zones, and notices. Assignment of the data to message sets controls access to this data. Individual RSs are authorized only the specific message sets that contain the data for which they are to be granted access. Message set authorization is input to the unit library. Message sets and message set authorizations allow for a high degree of flexibility for military operations while limiting the information to those units that need it. See Appendix B for a detailed discussion of message sets.

NEEDLINE LIBRARY

3-140. Needlines are the communications paths among the users and the EPLRS control elements. Planners must determine needline requirements as early as possible in the predeployment planning process to permit the configuration of available EPLRS assets to meet the requirements of the user community. Key components for creating and modifying a capable network are needline activation, inactivation, and change. The needline library is the

database for these communication paths that the EPLRS signal and control elements maintain. See Appendix A for a detailed discussion of needlines.

ESTIMATING COMMUNICATION NETWORK CAPACITIES

3-141. The capacity of a communication network is defined as the maximum transmission load that the networks can support with an acceptable grade of service (GOS) to the users. The number of RSs, waveform capacity, and communication network architecture is the primary factor affecting the capacity of the EPLRS communication networks.

3-142. The EPLRS's communication network architecture is structured to increase network robustness, allow rapid reconfiguration when the network connectivity is disturbed, and minimize the complexity of the algorithms involved in finding conflict-free assignments. Network capacity includes time, frequency, and code division multiplex.

3-143. The network capacity is measured in TU/second (sec) (delivered from an originating user to end user, including relays) and by the amount of data (bits) contained in each TU. The network is most efficient when the user messages are formatted in multiples of 80 bits. Early EPLRS experience indicates that an average of two relays is utilized on each communications circuit. This results in four RSs supporting each assigned circuit. This indicates that the primary limiting factor is finding a common timeslot block available at both endpoint RSs and at acceptable relay RSs.

3-144. As another predeployment task, the SYSCON determines how the needlines are allocated within each NCS community. To maintain a solid CONOPS plan, each NCS should not handle more than 375 active needlines. Since this is in the planning stage, the SYSCON does not know exactly how many needlines will be active or passive. However, through experience and knowledge of military operations, the SYSCON determines the potential for an NCS being loaded with more active needlines than desirable. Based on this check, the planner determines that it is advisable to shift the NCSs' AORs to maintain a better balance.

COMSEC PLANNING CONSIDERATIONS

3-145. The SYSCON performs COMSEC planning, and the corps and division implement it. Development of an EPLRS essential management plan provides doctrinal details for planning procedures. The NCS operator implements this plan through NCS initialization. The NCS operator can change some of these initialization parameters if requirements change.

CORPS COMSEC PLANNING

3-146. The COMSEC planning considerations developed at the corps level are provided to each division along with operational requirements. The corps level plans the cryptographic community.

Cryptographic Communities

3-147. Cryptographic communities are a set of RSs that share the same TRANSEC or traffic level key on the control network. In EPLRS, cryptographic communities are partitioned at the corps level into multiple NCS communities. The standard procedure is to divide the RS cryptographic communities into divisional areas with gateways to allow data exchange between the multiple NCS communities. The corps plans the gateway requirements and locations. Table 3-5 lists the different COMSEC keys and their functions.

Table 3-5. EPLRS COMSEC Keys

KEY	FUNCTION
Seed keys (KOKs)	Initializes each NCS KOK-13 and generates the I-KEK, traffic, command, rekey, and community of interest (COI) keys. The key production keys (KPKs) are provided in paper tape form and require the key 0erating instruction (KOI-18) paper tape reader for loading into the KOK-13. Seed keys include weekly, monthly, and yearly keys for the current period. They can also include the next weekly and next monthly keys. Seed keys fall into three categories: • Weekly Seed Key (Z2) – Generates new working traffic keys. • Monthly Seed Key (Z1) – Generates new rekey, command, and COI keys. • Yearly Seed Key (Z3) – Generates the I-KEK.
KEKs	
I-KEK	Generates from the yearly (Z3) KPK. The I-KEK is manually loaded into the RS. All RSs require the I-KEK to operate in the EPLRS net. The I-KEK encrypts the rekey packages that the NCS transmits to each RS upon the RS's first entry into the network. An RS cannot receive keys over the air without an I-KEK. The I-KEK determines an RS's classification. Any EPLRS RS can be keyed for either confidential or secret to satisfy mission requirements. Doctrinally, the I-KEK cryptographic period is one year; however, the RS keep-alive-battery holds the EPLRS cryptographic keys for 60 days. Every 60 days, during preventive maintenance, the I-KEK is replaced. Nevertheless, the requirement for a yearly update of the I-KEK remains.
Unique-KEK (U-KEK)	Generates from the weekly (Z2) KPK. The U-KEK (also called the rekey key) encrypts the rekey packages that the NCS transmits to each RS as part of the recurring OTAR process. Once an RS uses its I-KEK to establish contact with the NCS, the U-KEK replaces the I-KEK .
Transient-KEK (T-KEK)	Generates from the weekly (Z2) KPK. The T-KEK encrypts rekey packages transmitted to RSs that are in transient status moving through the network from one multiple NCS community to another. The T-KEK is unique to each RS.

Table 3-5. EPLRS COMSEC Keys (Continued)

KEY	FUNCTION
Traffic Encryption Key (TEK)	
Common-TEK (C-TEK)	Generates from the weekly (Z2) KPK. Encrypts and decrypts all transmissions from the NCS and RSs. The C-TEK is held divisionwide. The current C-TEK is delivered before any of the other traffic keys or commands. The C-TEK is manually loaded into the radio and is required for initial net entry.
Control-TEK (CN-TEK)	Generates from the monthly (Z1) KPK. The CN-TEK (also called the control key) is held on a pairwise unique basis between the NCS and each RS. It is used as an additional level of encryption to command encrypt messages between the NCS and RSs.
COI key	Generates from the weekly (Z2) KPK. Provides security for needline traffic.
Group-TEK (G-TEK)	Generates from the monthly (Z1) KPK. Encrypts and decrypts data transmissions between a source RS and multiple destination RSs. Each member of a group holds a G-TEK.
Duplex TEK (D-TEK)	Generates from the monthly (Z1) KPK. Encrypts and decrypts data transmissions between two point-to-point RSs. D-TEKs are held on a pairwise basis between RSs.
Working (current) traffic key	Enables the RS to operate in the EPLRS network during the week assigned to the working traffic key.
Rekey key	Permits the RS to advance to the next week using the next traffic key.
Next (week's) traffic key	Permits the RS to advance to the keys for the cryptographic period for next week.
COI key	Provides COMSEC between the source and destination units identified on the needline.
Command key	Provides command protection for the RS. Command keys are delivered to the RS when the user status report (USR) indicates an invalid command key status and prior to sending any COI keys.
OTAR	Allows the RSs to receive the next rekey, traffic, command, and COI keys via the control net from the NCS. When the NCS generates the next rekey net command, it transmits the next traffic, rekey, command, and COI keys to all RSs who are or will become active.

Key Generation and Distribution

3-148. The traffic key and the I-KEK for each multiple NCS community in a corps must be available at the NCS in each of these communities. This allows each NCS to provide authorized users (such as the corps commander moving from one division AOR to another) with the necessary transient keys for entry into an adjacent multiple NCS community. To accomplish this, the corps must establish COMSEC procedures for the generation and distribution

of the TEKs and I-KEKs. Since these procedures require wide distribution of all traffic keys and I-KEKs, the agency best suited for this responsibility is the corps SYSCON. The SYSCON–

- Orders a set of KOK-13 seed keys for the corps multiple NCS communities and each division. Each set consists of weekly (used for general traffic), monthly (used for rekey), and yearly (used for I-KEKs) seed keys.
- Designates which seed keys are assigned to each multiple NCS community. To maintain cryptographic isolation from other divisions, each division will be assigned unique monthly and yearly seed keys. All divisions will be assigned a common weekly seed key to permit transition between divisions. The corps SYSCON will direct the loading of these, via a tape reader, into the KOK-13 in each NCS.

3-149. Each NCS generates traffic keys and I-KEKs for its respective division. These keys may be stored for an upcoming exercise, operation, or contingency OPLAN. As a precautionary measure against failure of the battery that maintains memory storage, each division should load its keys into two or more separate fill devices.

3-150. If the NCSs within a multiple NCS community are not collocated at the start of the exercise or operation, then the division should load two or more fill devices for each location.

3-151. The division level SYSCON directs the NCSs to generate the appropriate number of confidential and secret I-KEKs to meet the needs of the user community. The division loads the I-KEKs, along with the traffic key for the division's user community, and distributes them via COMSEC channels for storage or through S6 channels for initialization at the user's RS.

DIVISION COMSEC PLANNING

3-152. At the division level, an important part of COMSEC planning considerations is defining RS authorizations based on unit task organization and mission scenario. To implement these authorizations, the NCS operator can change the needline library. The NCS operator can also change the RS authorizations dynamically when operational requirements change. The COMSEC planning at the division level includes the distribution of seed keys to each NCS within the division. Each NCS uses these keys to generate operational keys for the RSs within its community. The division SYSCON–

- Ensures that the division receives the seed keys from the corps.
- Directs an NCS to generate I-KEKs for the user community with the appropriate security classification and to load them into the fill devices designated for the users and controlled by the appropriate COMSEC custodian/S6. To prevent generation of duplicate I-KEKs, each NCS within the division should receive unique yearly and monthly seed keys.

COMSEC PROCEDURES

3-153. The EPLRS COMSEC architecture provides command protection for the EPLRS control network and communication privacy on the communication network. The RS cryptographic initialization consists of manual and OTAR key distribution.

Manual

3-154. The manual stage is the first activity. It requires the loading of an I-KEK and a traffic key from a mechanical fill device into each RS. Keying from a fill device is accomplished during a single visit to the RS location or as the EPLRS user is issued the RS.

OTAR Distribution of Keys

3-155. Once an RS receives the I-KEK and traffic key from the fill device, it attempts to enter the EPLRS control network. After it has entered the network successfully, the NCS transmits other keys to the RS by OTAR to allow it to operate in the EPLRS network.

3-156. COMSEC planners at higher headquarters schedule all NCSs and RSs for a new cryptographic period once a week (weekly advance) and once a month (monthly advance). Once a year, higher headquarters schedules all NCSs and RSs to be initialized with new I-KEKs (this process is called a yearly update). Table 3-6 describes these events.

Table 3-6. I-KEK Initialization

Event	Procedure
Weekly advance	Once a week, all NCS operators must load a new weekly (Z2) seed key into the KOK-13 and initiate a synchronous OTAR of next keys to all RS users. Once all RSs receive their next keys, the NCS operators enter a coordinated advance time that allows RSs to transition to the new keys. If a RS is deployed prior to the advance time, it should be manually loaded with traffic keys via a fill device for the current cryptographic period and the next cryptographic period in order to guarantee that it will be supported after the advance.
Monthly advance	Once a month, all NCS operators must load the new monthly (Z1) seed key and new weekly seed key in the KOK-13s and initiate an OTAR of next keys to all RS users in their communities. The next monthly key generation process is the same as the next key generation for the synchronous weekly advance process.
Yearly update	Once a year, all NCSs and RSs are cryptographically reinitialized with new I-KEKs based on a new yearly (Z3) seed key. In the beginning of the yearly update process, each NCS loads a copy of the new yearly seed key while operational, so that it can continue to support RSs loaded with I-KEKs for the new or the old year. After confirming that all NCSs have loaded the new yearly seed key, each NCS becomes nonoperational (one at a time). The NCS zeroizes and reloads its KOK-13 with the new and old yearly seed keys and current monthly and current weekly seed keys.

Table 3-6. I-KEK Initialization (Continued)

Event	Procedure
New I-KEK loading[1]	Each NCS obtains and loads new I-KEKs into the ECRU in the NCS and RSs. Each NCS returns fully operational and supports RSs loaded with the new or old I-KEK. This entire process may take several weeks or until all NCSs and RSs have been cryptographically reinitialized.
Key transition	After confirmation that all NCSs and RSs have been cryptographically reinitialized, each NCS (one at a time) stops supporting the old yearly seed key. This means the NCS becomes nonoperational, reloads the KOK-13 with only the new yearly seed key, old monthly seed key, and old weekly seed key, then returns to operational status.

[1] See TM 11-5810-394-14&P for additional guidance on loading the COMSEC keys.

KEY MANAGEMENT

3-157. To understand key management, it is necessary to understand keys, COMSEC architecture, hardware, and associated operational considerations.

COMSEC Architecture

3-158. EPLRS COMSEC architecture provides its RS users and ABCS host-users with several operational features that enhance network security and flexibility. These features are–

- Confidential or secret level secure communications.
- Control and communications network privacy.
- OTAR key distribution.
- Yearly update.
- RS authorization.
- Interdivisional (transient) users linkage.
- Gateways between multiple NCS communities.

3-159. The EPLRS COMSEC architecture is constructed of single and multiple NCS communities.

3-160. **Corpswide Deployment**. To support EPLRS networks for a corps force structure of multiple divisions, more than one multiple NCS community is needed. Each community has its own time synchronization and cryptographic net structure, but all communities within the corps share a common T-KEK that allows RSs to communicate between divisions through the gateways. Only corps units with operating facilities (OPFACs) in the division area will receive EPLRS equipment.

3-161. **Independent RS Deployment.** Army light and contingency forces must be prepared for rapid insertion into an AO. After planning the type of EPLRS network required during the predeployment phase, limited airlift sortie allocation may prevent simultaneous movement of an NCS to the area. By generating keys and loading RSs in advance of deployment, keyed RSs

operate without the NCS in a deployed network until the cryptographic period of the key expires.

COMSEC Hardware

3-162. The NCS controls and implements SYSCON instructions regarding cryptographic net management using COMSEC hardware. Table 3-7 lists the hardware and its functions.

Table 3-7. COMSEC Hardware

Hardware	Function
KOI-18 tape reader	The KOI-18 tape reader enables the KPKs, which come in paper tape form, to read into the remote rekey equipment (KOK-13). Each NCS has one KOI-18 tape reader.
KOK-13 remote rekey equipment	The KOK-13 is a cryptographic key generator that generates and packages the keys for the RS and for OTAR distribution. Each NCS has one KOK-13.
ANCD/KDD	After the KOK-13 generates the keys, they are downloaded into the automated net control device (ANCD)/key distribution device (KDD), which physically loads them into the EPLRS equipment. Only the initial key load must be accomplished through the ANCD/KDD. The NCS distributes subsequent keys via OTAR.
Key Generator (KG-87)	The key generator (KG-87) is embedded into the ECRU, which resides in the NCS. The KG-87 encrypts and decrypts control network traffic between the NCS and RSs. The KG-87 provides encryption of rekey packages for the OTAR of the RSs.
Key Generator Variable (KGV-13)	The KGV-13 is embedded in the EPLRS RSs. The KGV-13 encrypts and decrypts network data and decrypts the OTAR instructions from the NCS.

Operational Considerations

3-163. **SYSCON Planner**. Careful planning by the SYSCON is critical to the successful operation of the EPLRS network. Accurate planning information from corps, division, and brigade is essential to support the continuing requirements of each operation. The SYSCON must complete the following functions before deployment and describe them in a unit SOP:

- Define the cryptographic communities.
- Establish the method for physical distribution of KPKs or seed keys to the NCS communities.
- Define gateway requirements and deployment of NCSs and gateways.
- Determine EPLRS RS authorization.
- Set the cryptographic period, designating when the EPLRS cryptographic period is to advance to the next period. For example, establish the advance time and provide instructions to the NCS operators to initiate rekey network request four to 12 hours before the

advance time is entered. Transmit a second rekey network request 30 minutes before the advance to guarantee reactivated needlines are supported after the advance.

3-164. **NCS Operations**. Each NCS must maintain the proper paper tapes containing its assigned KPKs. The I-KEK and C-TEK are generated and loaded into the EPLRS RSs for operational and training contingencies. This loading is done before any actual mission requirement so the NCS and RS operators can ensure each RS has a good cryptographic load. Maintenance keys are also generated at this time.

3-165. The keep-alive batteries in the EPLRS RSs allow the radio to hold their cryptographic loads for 60 days. When an EPLRS RS deploys with the I-KEK and current C-TEK, the NCS transmits all other required keys via OTAR to the RSs. It is necessary to have the same monthly (Z1), weekly (Z2), and yearly (Z3) KPKs across the corps for consistency. Note that the yearly KPK (Z3) is tagged with both the division's and the KOK-13's identification. If the yearly KPK (Z3) is properly distributed, duplicate I-KEKs will not happen.

3-166. Each NCS's KOK-13 should generate the keys for its RSs. The NCS operator transfers the keys to the ANCD/KDD, and RS operators physically load them into the EPLRS equipment. If an NCS is down, an adjacent NCS generates keys for those RSs. If the yearly (Z3) KPK is reused, duplicate I-KEKs are expected. IAW standard procedures, the NCS operators should always check for duplicate I-KEKs at the beginning of a mission and as RSs join the community.

3-167. **RS Operations.** When the RS is without cryptographic keys, the operator must physically load it with an I-KEK and the current C-TEKs. The operator has the option of loading two traffic keys. If the operator is entering the net close to an advance, he will load both the current and next C-TEKs. Before loading the keys into the RS, the operator must verify the EPLRS identification and guard channel and correct these, if necessary, since they cannot be changed after the unit is keyed. The operator must use the ANCD/KDD to reload the I-KEK and C-TEK anytime the EPLRS RS is zeroized, or if it loses its keys.

3-168. Once deployed with the I-KEK (which is replaced by the U-KEK after the RS's first contact with the NCS) and the C-TEK, the RS receives the other TEKs via OTAR from the NCS. The NCS uses OTAR instructions to command the RS to go to the next traffic key. This OTAR process does not require RS operator action. When the EPLRS RS is turned off, the keep-alive battery ensures that it retains its U-KEK and TEKs. Thus, all the operator has to do is turn on the RS and start operations.

3-169. **Entering a Net Near the Advance Time.** Net entry near the advance time takes preparation. OTAR is used. First, the NCS sends a rekey net command to each of the EPLRS RSs that provides the rekeying instructions for the next cryptographic period. Later, the NCS sends out the advance command, which activates the new keys and deactivates the old keys.

3-170. If an RS has not received the next TEKs, it falls out of net when the advance command is given. Thirty minutes before an advance, the NCS operator should conduct a last check ensuring all RSs in the net have the rekey instruction.

3-171. If an RS joins the net after that check, the RS may not have time to receive the next TEKs and that RS may go out of net during the advance. Such a situation occurs when an RS returns from maintenance and joins an operating net. To prevent this situation, an EPLRS RS entering the network within an hour of a scheduled advance should be loaded with the I-KEK, the current C-TEK, and the next C-TEK.

3-172. **Transient Operations**. If RS operators need to operate within an adjacent division's net, the operator must request a T-KEK and that division's C-TEK. The T-KEK, which is unique to each RS, and that division's current C-TEK allow the RS to synchronize with a gaining division so it can join that division's net.

3-173. Each EPLRS RS operates only in one cryptographic net at a time; however, with a T-KEK it can become resident in any community within the corps. Medical evacuation (MEDEVAC) helicopters that cross division boundaries and gateways operated by signal battalions are examples of users who will need T-KEK for their missions.

3-174. The EPLRS RS operator uses the URO device to request a T-KEK and the other division's C-TEK. The operator then requests residency in the new division's net to establish needlines and to be rekeyed and advanced in the new division.

3-175. **Gateway Operations**. A special RS operational capability is the gateway configuration. Each division has four gateways it can deploy to enhance network performance and establish data communications between adjacent divisions. The division should deploy its gateways as early as possible to best support its communication requirements.

3-176. Each division has its own net timing and cryptographic keys. This prevents OTAR between divisions. Two EPLRS RSs, each from different divisions whose data ports are cabled together, form a gateway. Each of these RSs is mounted in a HMMWV. The gateway configuration allows data to pass in a decrypted form over the cable between the two collocated RSs. Each RS can receive encrypted data from within its own community and transmit encrypted data to its community. However, the data passing through the gateway cable is red data. Therefore, physical security must be maintained at all gateways. Both RSs must be keyed to the same security level, either secret or confidential.

3-177. An operator can establish a gateway by keying both RSs for his division and establishing one of the RSs as a resident in the adjacent division using transient key methodology. If the operator has access to the keys from both divisions, he can key each RS for its proper division. Once the two RSs are properly keyed, the operator can activate the needlines and the LCNs that have been assigned to that gateway.

3-178. The same needlines and LCNs must be present on both gateway RSs. The LCNs steer the needline data to the correct destinations. For example, if a unit in Division A needs to communicate with a second unit in Division B, there must be the same needlines and LCNs available in both divisions to link the units. Figure 3-8 shows an example of a gateway boundary with LCNs in use.

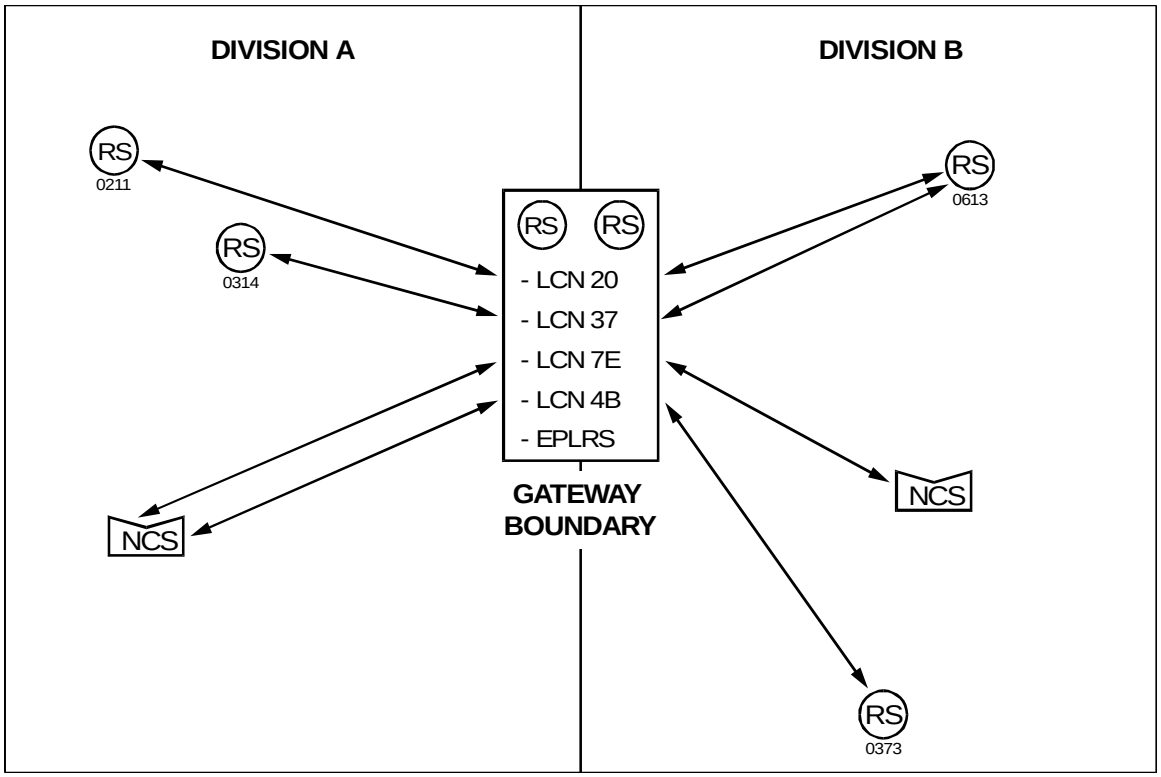

Figure 3-8. Gateway Boundary