Chapter 1

Overview of the EPLRS

The Enhanced Position Location Reporting System (EPLRS) provides rapid, jam-resistant, and secure data transfer among the information systems. It provides services such as position/navigation (POS/NAV) and battlefield control measures (lanes and corridors) that significantly enhance the force in its conduct of operations in all tactical environments.

COMMUNICATIONS ARCHITECTURE

1-1. Figure 1-1 shows the communications architecture design for supporting the command and control (C2) systems. Broadcast incorporates advanced technologies in disseminating intelligence and weather information. The area common user system (ACUS) is based on the mobile subscriber equipment (MSE) at echelons corps and below (ECB). The combat net radio (CNR) is primarily the Single-Channel Ground and Airborne Radio System (SINCGARS). The Army Data Distribution System (ADDS) consists of the Joint Tactical Information Distribution System (JTIDS) and EPLRS. The EPLRS provides the technical solution to the data distribution requirements of the following C2 systems:

- Maneuver Control System (MCS).
- Advanced Field Artillery Tactical Data System (AFATDS).
- Air and Missile Defense Planning and Control System (AMDPCS).
- All Source Analysis System (ASAS).
- Combat Service Support Control System (CSSCS).
- Force XXI Battle Command Brigade and Below (FBCB2).

System control (SYSCON) ensures the effective operational and technical management of EPLRS at ECB.

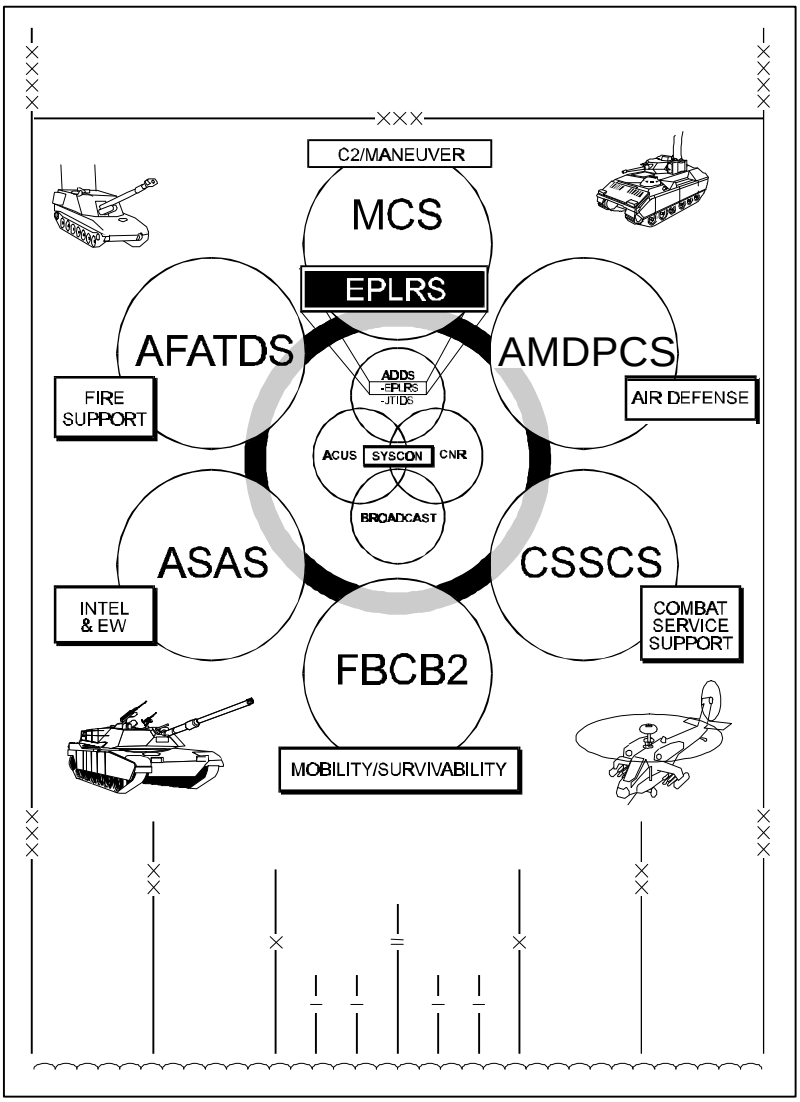

Figure 1-1. ABCS and Supporting Communications Architecture

NETWORK ARCHITECTURE

1-2. EPLRS network architecture supports the transmission of C2, situational awareness (SA), and POS/NAV data throughout the battlespace on the modern battlefield. The network architectural concept is based on EPLRS communities configured to support a division's area of operation (AO).

1-3. Typically, each community consists of a network control station (NCS) and radio sets (RSs). Signal personnel assigned to the division signal battalion own, operate, and maintain the NCS. The RSs are allocated to users that have–

- Maneuver.
- Fire support (FS).

- Intelligence and electronic warfare (IEW).
- Air defense (AD).
- Combat service support (CSS).
- Mobility and survivability.

1-4. Operations SYSCON element of the division signal battalion S3 directs the employment of EPLRS. EPLRS performs specific functions designed to increase the effectiveness of data communications network supporting the division under varying tactical situations.

1-5. EPLRS architecture of multiple NCS communities supports a typical deployment of an Army corps with two divisions, each having three brigades on line. Figure 1-2 shows an EPLRS network architecture. Each division's EPLRS network community (made up of four NCS areas of responsibility [AORs]) has its own time synchronization and cryptographic keys. Gateways, a pair of interconnected RSs, achieve data communications between these communities. EPLRS allows users to move between a division's communities while retaining system services.

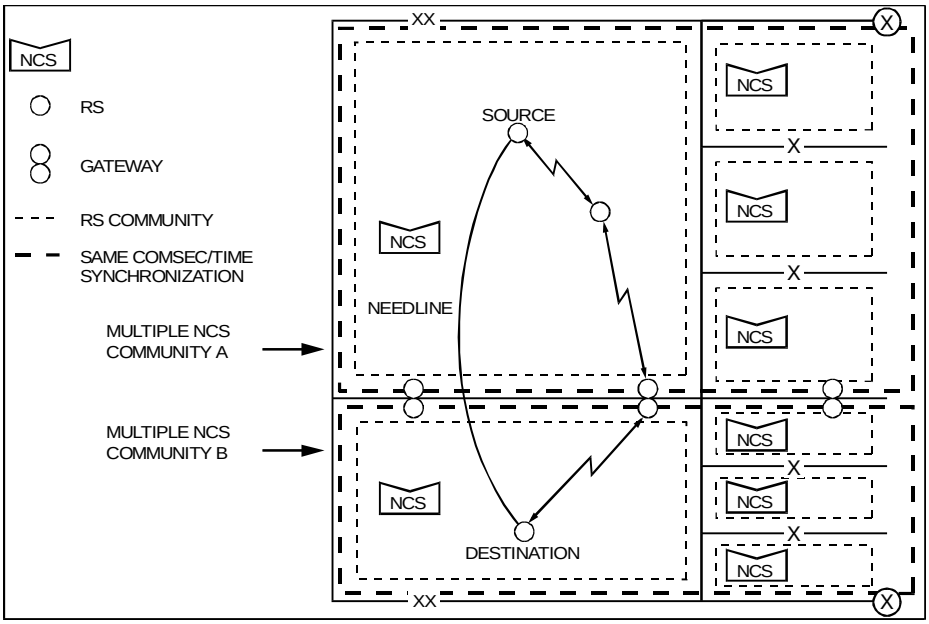

Figure 1-2. EPLRS Network Architecture

FUNCTIONAL DESCRIPTION

1-6. EPLRS is a state-of-the-art, line-of-sight (LOS), data-only digital radio system. It is a position location, navigation, identification, and communication system. The NCS is used for system initialization, monitoring, and control. The RS, allocated to EPLRS users/operators, provides secure, jam-resistant digital communications and accurate POS/NAV capabilities.

Data Communications

1-7. The system handles computer-to-computer data flow at ECB to support the ABCS and other emerging data communication requirements.

Position location

1-8. The RS operator enters requests and receives position location updates. Such data is constantly updated and stored at the NCS; it is provided to each RS upon request.

Navigation

1-9. Authorized users may request guidance through lanes and corridors, out of zones, and to predesignated items (PDIs). Once requested, the system transmits automatic messages to the user while traveling through the lane or corridor until completion. Upon entering a zone, the system transmits automatic messages until the user exits the zone. RS operators obtain the military grid reference (MGR) or advisories of bearing/range (B/R) information to assist them in navigating to PDI-checkpoints, landmarks, or other units in the network.

APPLICATIONS

1-10. EPLRS supports ABCS interconnectivity requirements (enabling the force to conduct more effective operations within the battlefield operating system [BOS]) and operational doctrine of the US Army. As a major component of the ADDS, EPLRS provides communication paths that effectively support each BOS.

1-11. Knowing one's own location and the location of higher, subordinate, and adjacent units is essential to achieving the level of C2 and SA necessary for effective Army execution of operations, now and on future battlefields. EPLRS enhances the combat unit's ability to rapidly and decisively control and execute operations by transmitting data and maintaining real-time SA. EPLRS supports improved C2 and SA by host computer systems in many functional areas, including–

- CSS operations.
- Mobility operations.
- Graphical control measures.
- Aviation support.
- Patrol navigation.
- FS planning and execution.
- Night attack.
- Link-up operations of converging forces.
- Combat intelligence dissemination.
- Position reporting.
- Posting status reports.
- Free-text messages.

MANEUVER

1-12. The maneuver BOS employs EPLRS by using its communications and POS/NAV capabilities. The MCS uses EPLRS as a data conduit to coordinate and synchronize battlefield maneuver. The maneuver units, supported by MCS, use EPLRS to exchange data with ABCS components in the other BOSs. Successful combat operations require that units effectively navigate across the battlefield and constantly report their position to higher headquarters. This allows the commander to effectively control operations.

1-13. When using EPLRS, collecting position data is automatic and commanders can accomplish it in seconds. Current position data allows commanders at all echelons to efficiently use available combat power. EPLRS communications and POS/NAV capabilities support MCS and FBCB2 to accomplish the maneuver subfunctions discussed below.

Offensive Operations

1-14. The coordination of maneuver and fires of attacking units to prevent fratricide is a major problem on the tactical battlefield during offensive operations. Fratricide is a severe threat without the reception and transmission of timely and complete C2 data and accurate SA information in near real-time.

1-15. EPLRS provides more effective communications that support the BOSs coordination of attack. Thus, each maneuver element is better employed to conduct decisive operations. The inherent EPLRS friendly identification feature enables units to establish and maintain positive maneuver control and permits the commander to confidently and effectively focus the attack against the enemy.

Defensive Operations

1-16. Friendly defensive positions in the EPLRS database allow enemy targets to be entered into the system relative to the defender's positions. The MCS quickly and effectively generates calls for fire. Users may employ the same data points to direct and control direct fires and defensive maneuvers.

Retrograde Operations

1-17. Delays and withdrawals are among the most difficult operations to control and execute. EPLRS provides an improved communications support that enables the commanders to better control the operation and helps units to better move, shoot, and provide effective mutual support during retrograde operations.

MOBILITY AND SURVIVABILITY

1-18. Engineer units employ the EPLRS POS/NAV data and communication capabilities to support the mobile and survivable BOS. BOSs request and review resources, transmit orders, and input the locations of obstacles and boundaries of both friendly and enemy minefields and other linear and area obstacles. Discussed below are examples of EPLRS applications to mobility and survivability.

Control Measures

1-19. Control measures include–

- Boundaries.
- FS coordination lines.
- Restrictive fire lines.
- Front line traces.
- Advance limits.
- Routes.
- Screen lines.
- Passage lanes.
- Attack directions.
- Phase lines.

A phase line is developed from a series of PDIs (points previously entered into EPLRS). Figure 1-3 shows EPLRS graphic control measures.

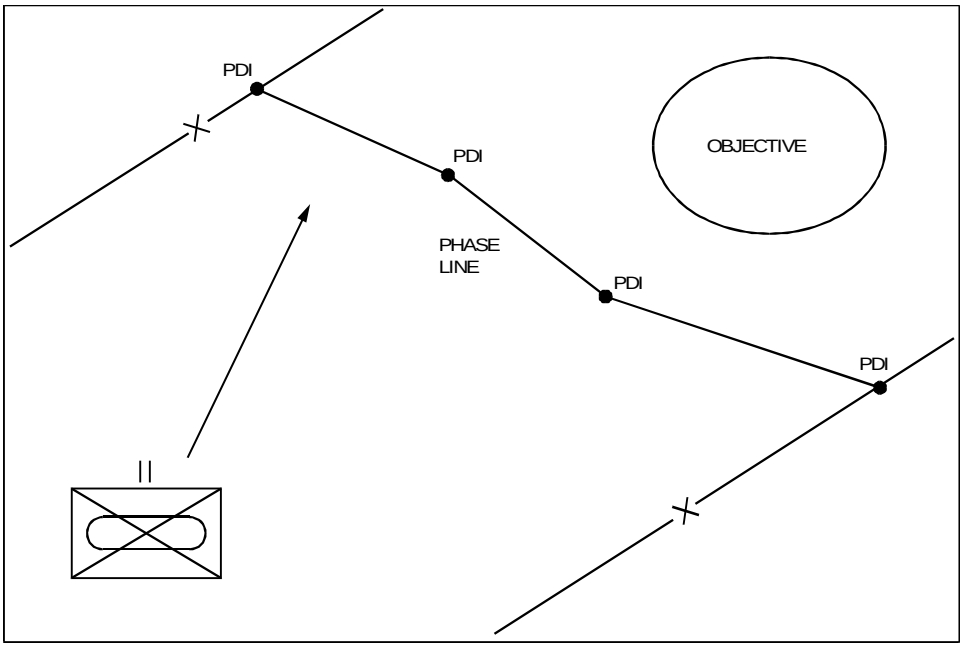

Figure 1-3. EPLRS Graphical Control Measures

Predesignated Items

1-20. Users employ EPLRS to designate fixed points of reference to support military operations. These points include coordination points, contact points, start points (SPs), check points, and release points (RPs). For example, a unit could receive the SP, check point, and RP for a road march over EPLRS user readout (URO). This avoids the need for delivery of a strip map, overlay, or long-voice radio transmission.

Zones

1-21. EPLRS warns units when they approach identified friendly or enemy emplaced minefields (or contaminated areas) by establishing that area as a zone. After the NCS operator identifies the minefield as a zone, any RS-equipped unit entering the zone receives an alert alarm and a B/R out of the zone. Figure 1-4 shows an EPLRS zone.

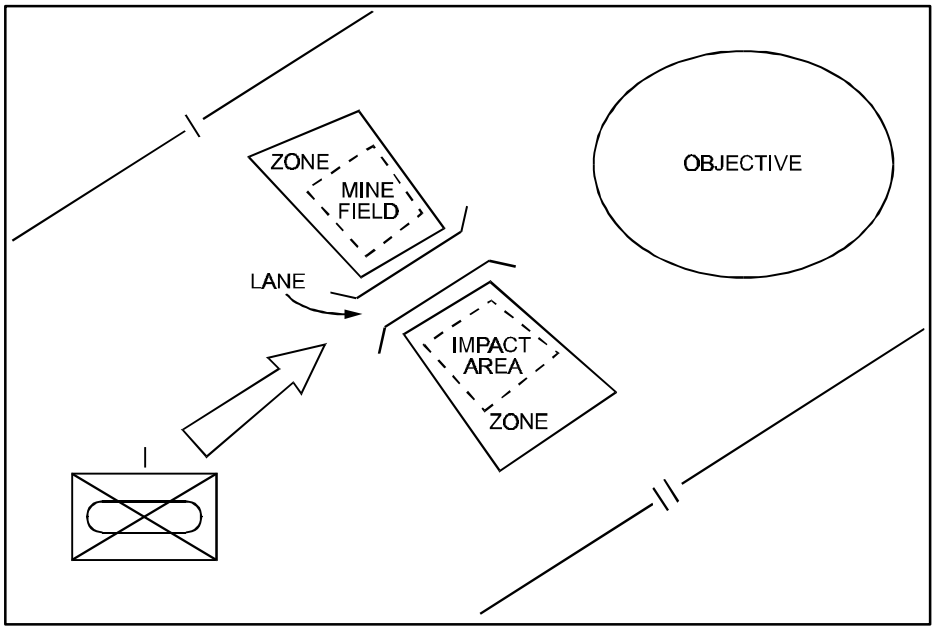

Figure 1-4. EPLRS Zones and Lanes

1-22. Any designated EPLRS zone around a minefield should be slightly larger than the minefield. This allows a safety buffer for units entering the zone so that they receive an alert before actually entering the minefield. To counter the possibility of high ambient noise in the area, the remote annunciator unit (RAU) provides a loud audible signal via loudspeaker and intercom.

> **CAUTION**
>
> The alarm sound received as an alert is not very loud and may not be heard over an engine sound. It sounds only once, not continuously. It is the same sound that is heard when a message arrives.

1-23. A friendly artillery impact area is an example of a zone. Any RS-equipped unit entering the zone receives an alert alarm and a B/R out of the zone.

1-24. EPLRS provides the MCS and FBCB2 with the identification and marking of impact areas of indirect fire. RSs warn a friendly unit to stay clear of a dangerous impact area by having an EPLRS zone represent the impact area.

Lanes

1-25. A lane cleared through an obstacle (see Figure 1-4) may be difficult to locate and negotiate because of poor visibility or a lack of lane markings. Units equipped with EPLRS RSs locate and negotiate a lane and stay safely within its boundaries since EPLRS can transmit a number of points that, when linked together, identify a passage lane. EPLRS provides warning indications whenever the unit, vehicle, or individual strays too far from the centerline of the lane.

1-26. Maneuver units usually execute a river crossing during periods of reduced visibility to provide some cover from enemy observation. However, operating in darkness, fog, or rain may disorient friendly forces. To avoid natural obstacles (for example, swamps or steep banks), a lane guides the maneuver force to the crossing site, across the river, and safely beyond to initial positions on the far bank of the river

Passage of Lines

1-27. EPLRS assists units in successfully executing a passage of lines. EPLRS identifies the passage point, thereby informing the moving unit where it can safely pass through the stationary unit. Identification of the points within a lane designate passage lanes through friendly units or obstacles.

Convoy Control

1-28. EPLRS POS/NAV and guidance capabilities, integrated with its reporting and data distribution capabilities, allow improved control of convoys. PDIs are entered, used as checkpoints, and then modified and easily updated. Transmission of an EPLRS message quickly and clearly sends a series of check points, SPs, and RPs to units. This avoids the need for strip maps, overlays, or lengthy voice radio messages.

FS

1-29. In the future, EPLRS compatibility with AFATDS will enable it to fully support FS requirements. The needlines (communication circuits that the system provides) will include paths between the forward observer (FO) and the fire support team (FIST). The EPLRS RS is the only EPLRS component that the FO or the FIST will require. The system provides needlines that will include paths to the weapons systems, division artillery (DIVARTY), sensors, and the fire direction center (FDC).

AD

1-30. EPLRS provides efficient data distribution for the AMDPCS supporting the forward area air defense (FAAD) BOS. Figure 1-5 shows an EPLRS FAAD architecture. EPLRS distributes radar tracks and aircraft data to key air defense artillery (ADA) C2 and fire unit locations. EPLRS needlines are used to employ the Avenger and Stinger weapons systems to obtain sensor-to-shooter data.

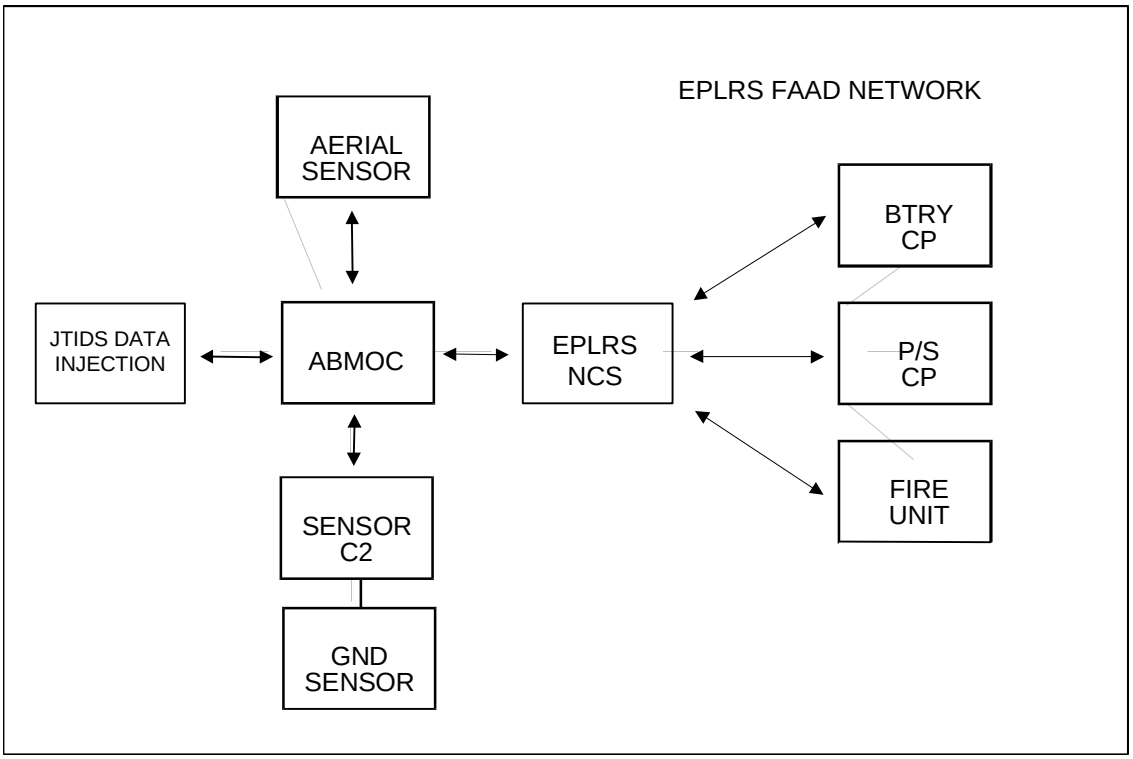

Figure 1-5. EPLRS FAAD Architecture

IEW

1-31. Keeping friendly forces informed of current intelligence on locations of enemy forces is a major problem in fast-moving tactical situations. The unit intelligence officer has access to a variety of intelligence sources and may be able to track enemy formations. EPLRS assists in disseminating that information to maneuver elements and supporting arms, and helps prevent the jamming of tactical radios. Figure 1-6 shows EPLRS support of intelligence dissemination.

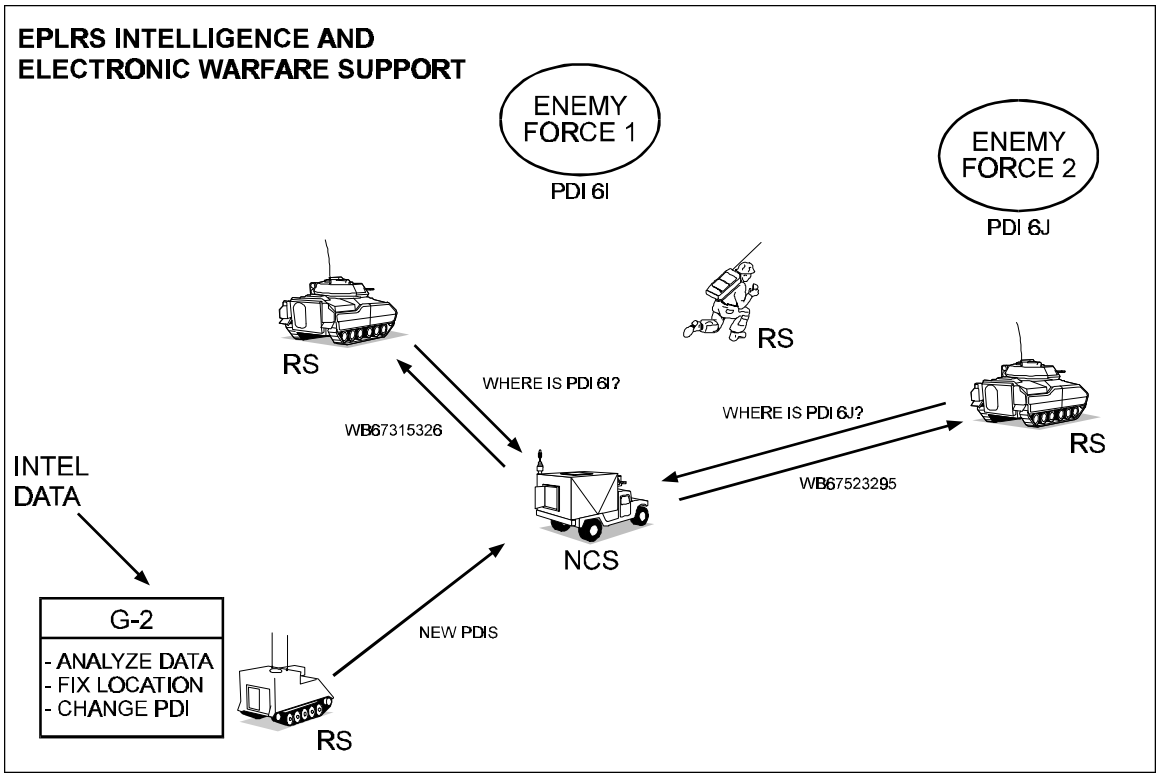

Figure 1-6. EPLRS Support of Intelligence Dissemination

1-32. The NCS assigns a PDI to each formation once enemy forces are identified. Friendly units are notified which PDI is associated with which formation. In the standing operating procedure (SOP) or operation order (OPORD), the PDIs indicating an enemy are coded to correspond to the type or size of unit. For example, 6X could equate to a tank battalion, and 6Y could equate to an infantry battalion.

1-33. Notification can be by a fragmentary order (FRAGO), narrative message, or a multipart EPLRS message. When the intelligence officer has determined a new position of an enemy force, he can change the associated PDI and use the NCS to make it simultaneously available to any friendly unit through a formatted EPLRS message.

CSS

1-34. EPLRS is a communication pipe so CSSCS can facilitate the delivery of fuel, ammunition, and medical and maintenance support to maneuver units. For example, a fuel truck that is dispatched to support a maneuver platoon is equipped with an EPLRS RS. It uses the P command to find the platoon, although the platoon may have moved since the truck departed on its mission. Conversely, the platoon leader determines the location of the fuel truck at all times.

SYNCHRONIZATION

1-35. Enabling the force to more effectively synchronize operations is one of EPLRS most significant applications to the support of the ABCS. EPLRS assists in the synchronization of maneuver, FS, AD, IEW, CSS, and mobile and survivable BOSs to focus combat power and achieve success. The EPLRS transmits multiple grid locations and free-text messages. This permits the rapid transmission of orders using host computer systems and greatly improves the C2 of units conducting fast-paced operations.

1-36. The EPLRS POS/NAV and data transmission capabilities allow the commander to plan and execute operations with greater effectiveness and confidence. EPLRS gives the commander a current, complete, and accurate picture of the battlespace and readily influences the operation to guarantee success.