## Chapter 9

# Command and Control Platforms in the TI

C2 platforms operating on the modern battlefield increase the commanders ability to operate on the move, communicating seamlessly both vertically and horizontally. This C2 platform increases the commanders ability to make decisions within the enemies planning cycle.

## C2 FUNCTIONS

9-1. To ensure combat success on the modern battlefield, C2 of brigade and battalion-sized forces should be positive, flexible, and proactive. Fast-paced operations are controlled on the move through a free flow of critical combat information, SA data, and orders to subordinates. The deployment, employment, and configuration of the TI, as well as the platform and other automation and communications systems comprising the total system, support intensive combat operations at brigade and below. Communications personnel aggressively monitor, adjust, and maintain the systems that comprise the TI to ensure continuous and effective C2OTM.

9-2. Communications nets and capabilities support the commander's information requirements and his intent for the conduct of the operation. These provide the commander with a reliable and effective means to direct the actions necessary to accomplish the mission. C2 platforms are configured (and rapidly reconfigured, when necessary) to support these requirements.

9-3. C2 platforms are configured to meet the unique requirements of the unit and of the operation. Hardware is configured to meet unit requirements, and software is adjusted often to meet operational needs. The physical dimensions, automation capabilities, and complex communications of C2 platforms require staff officers and noncommissioned officers to be multidimensional. The input and output of data and voice communications during operations will place unusual demands on CP personnel at all locations.

## DEPLOYMENT

9-4. C2 platforms are deployed throughout the battlespace to enhance C2 and SA. The configuration and reconfiguration of the TI on the platforms are necessary to support the commander's concept of the operation.

## OPERATIONAL SOFTWARE

9-5. The C2V is configured with different ABCS components tailored to the units' unique mission. The FBCB2 or EBC is the primary ABCS used by the commander while on the move. The FBCB2 enables the commander to issue timely orders to subordinate units by using the C2 features of the TI, such as creating and sending fragmentary orders (FRAGOs). The operational use of the TI will be modified based on the–

- Commander's desires and modifications that may be found in the unit TSOP.
- Command and signal paragraph of OPORDs.
- FRAGOs regarding the use of data or voice transmissions.

9-6. The memory and speed of the hardware and the functionality of the software limit the use and configuration of the software. Addressees, filtering, and queuing may be configured to meet mission requirements. The commander, staff, and brigade/battalion S6 will determine the priorities for TI and voice communications based on the factors of mission, enemy, troops, terrain, time available, and civilian consideration. The TI should be measured against bottom-line needs of the unit. Unit TSOPs should address detailed employment of the TI with other communications means.

## OPERATIONAL PROCEDURES

9-7. The operational procedures for the TI and other ABCS components support the commander's concept, information requirements, and methods used to command and control the unit. As a total system, the C2 platform is unique. It has many different hardware and software systems onboard the same vehicle. This places a great demand on communications personnel to ensure the routers, servers, and systems they support are properly configured at the start of operations and can be adjusted or reconfigured as needed.

### TRAINING

9-8. The inherent capabilities and complexity of the TI requires that personnel be thoroughly familiar with its operations and operator-level maintenance to keep the system functioning. Frequent communications exercises (COMEXs) may be required to maintain skills on operational procedures and to provide training and practice for newly assigned personnel. The brigade and battalion S6s work closely with the S3s and commanders to schedule a sufficient number of COMEXs that will provide practice on the necessary TI skills. Rehearsals for operations also provide training and practice on skills that may be highly perishable and that may change frequently as the system evolves.

## C2V

9-9. The C2V is a fully tracked armored vehicle using the suspension and power train of the vehicle Bradley series and looks much like the multiple launch rocket system (MLRS). However, the rear compartment is a fixed, armored box outfitted with four primary workstations as shown in Figure 9-1. This vehicle is found in armored and mechanized infantry brigades and battalions. It accommodates the C2 hardware and software of the ABCS and the TI to support C2OTM. There are two jump seats for additional personnel, if required, and a small map board.

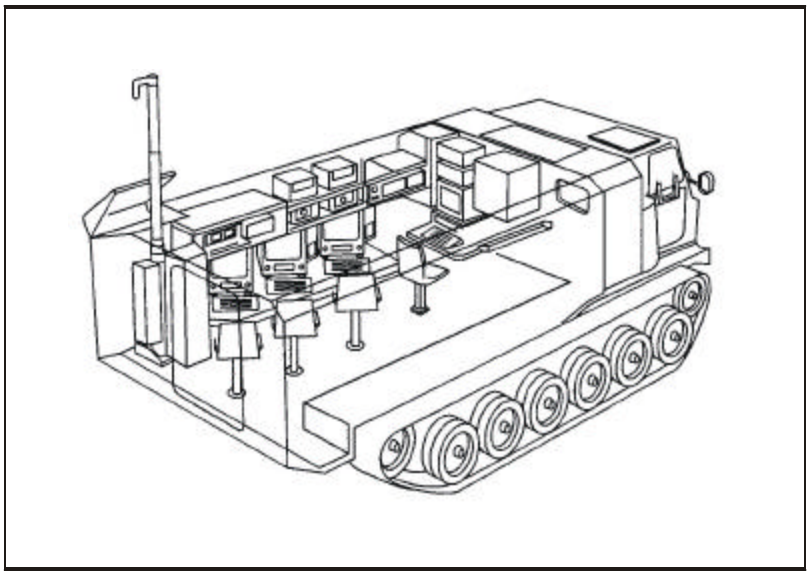

**Figure 9-1. Armored C2V Interior Layout**

9-10. Each workstation is equipped with ABCS subsystems, including FBCB2 or EBC, voice radio, and intercom systems. For example, the S2 station may have an ASAS terminal; the S3 station may have an MCS terminal; and the FS station may have an AFATDS terminal. The operators can relay data to each other from their stations and maintain voice communications within the vehicle and over the vehicular intra/inter communications system (VIICS) vehicle net radio (VNR). An on-board LAN links the different systems with each other and the vehicle communications system.

9-11. Operators use the VIICS VNR via the SINCGARS SIP/ASIP and the MSE for inter- and intra-vehicle voice communications to provide additional communications. MSE with facsimile (FAX) is available for access to the ACUS. The C2V operates in a wireless LAN whether functioning as a part of the TAC or main CP. It can also use wire and cable links to other C2Vs and C2 platforms for access to LANs and WANs, as required.

9-12. The C2V has a variety of communications antennas. In addition to whip antennas, erectable mast antennas provide long-range communications while stationary. The mast antenna cannot be used on the move. For stationary operations, a Standard Integrated Command Post System (SICPS) shelter can be placed at the rear of the vehicle to extend the CP enclosure.

## C2V AS PART OF THE TAC

9-13. The TAC conducts ongoing or current operations and takes on great importance during fast moving offensive operations and operations that require the spread of subordinate units over large areas. The TAC is located well forward at the brigade and battalion levels to facilitate communications with subordinate commanders. It is small, mobile, and responsive, and provides the commander with a relevant common picture of the battlefield. The personnel in the TAC provide the commander with combat critical information and disseminate his decisions, including those regarding CS and CSS assets. Figure 9-2 shows the brigade level TAC.

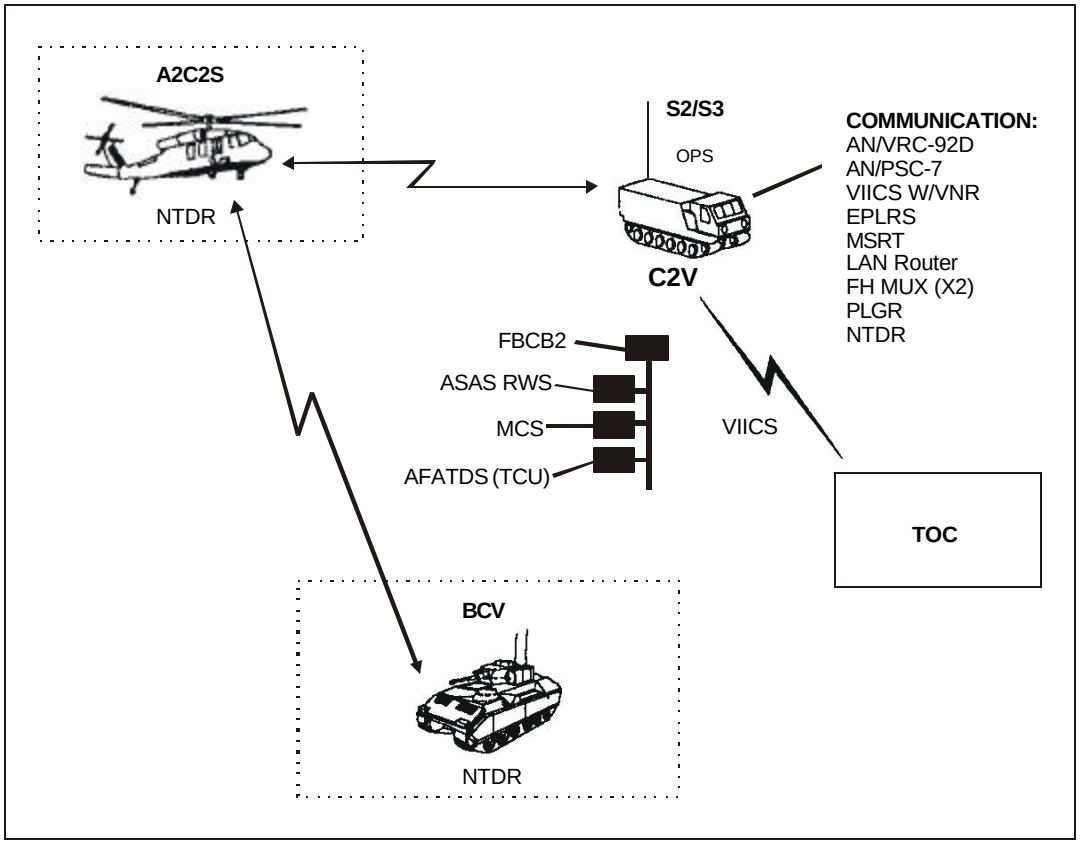


**Figure 9-2. Brigade Level TAC**

9-14. Armored C2Vs operating as a TAC conduct most C2 functions from a short halt. However, the functionality of the systems and the communications that support them are installed and configured to operate on the move. The FBCB2 onboard and other ABCS subsystems are configured to maintain the required connectivity of the staff elements that operate in the TAC at the brigade or battalion level. The make-up and functioning of the staff onboard the C2V will vary based on the commander's requirements.

9-15. Operations over long distances may require a retrans capability from the TAC to the main CP. The effective transmission range of radios using data is significantly less than with voice transmissions. The TAC may also be required to operate as the alternate main CP in an emergency if that is part of the unit TSOP. At the brigade or battalion level, the TAC may also serve as the temporary (or jump) CP while the TOC is on the move to a new location.

9-16. The functionality and communications interfaces for the brigade TAC will be significantly greater than at the battalion level due to the greatly expanded C2 and CS/CSS responsibilities at the brigade level. The requirements for LAN and WAN access for the brigade TAC (and TOC) will also be proportionately greater.

## C2V AS PART OF THE TOC

9-17. The TOC (or main CP) plans future operations and monitors and assists these operations at both brigade and battalion levels. The TOC maintains continuous communications with both higher headquarters and subordinate units. The TI SA and C2 features–

- Permit the TOC to monitor current operations in real-time and keep higher headquarters informed of unit progress without intruding into current operations and tying up voice radio nets.
- Allow the staff to better coordinate CS and CSS based on the high quality and currency of the data provided.
- Permit more assets and time to be focused on future operations.
- Allow for better C2 of the rear battle, if required.
- Support positive control of operations throughout the unit sector.

9-18. C2Vs may make up all or part of the C2 platforms at the TOC. TI employment is essentially the same regardless of the vehicle type. The TOC is less mobile than the TAC. The TOC often deploys with SICPS shelters as extensions for the C2Vs in much the same manner that the extensions on M1068s are used. This may require the remoting of TI hardware and antenna systems. Figure 9-3 shows an example of proper antenna separation for an armored TOC.

**CAUTION**

Antennas need at least 10 meters separation to avoid mutual interference. Antennas connected to a frequency hopping multiplexer (FHMUX) require a minimum of 30 meters separation from other systems. However, remoting of antennas away from the TOC will cause significant loss of transmission power. When possible, vary heights and separation of antennas to limit the possibility of cosite interference potentials. While varying heights, consider placing priority net antennas at maximum available height, which will improve transmission range and clarity.

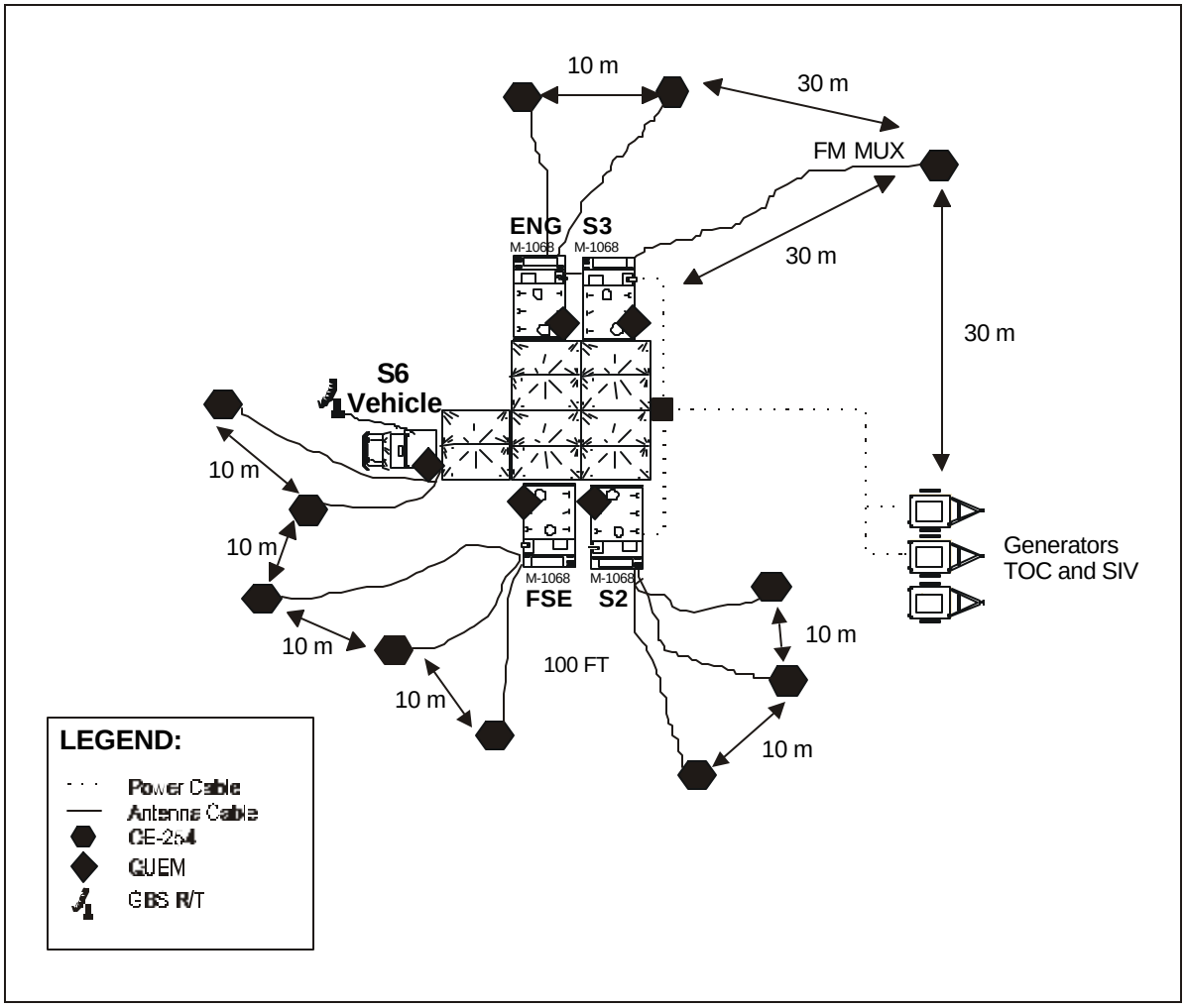


**Figure 9-3. Example of Proper Antenna Separation for an Armored TOC**

## BCV

9-19. The BCV is the battle command platform for both the brigade and battalion/task force level commanders. Brigade and mechanized infantry commanders have BCVs built on the M2 vehicle; tank battalion commanders use the M1 as their BCV. The commander determines the interior configuration and hardware/software in the BCV. The BCV generally includes the capability for ABCS subsystems, TI, and radios. It generally does not operate alone at either brigade or battalion levels. Additional FS assets, the tactical air control party (TACP), and additional communications support based on the commander's requirements may accompany the BCV.

9-20. Changes to task organization, and other changes that effect the capabilities of the TI during operations, may affect the signal officer's ability to reach and update the BCV databases, as required. The forward location of the BCV, and its constant movement, place a requirement on signal personnel to remain aware of the commander's location and movement patterns so that the BCV can be reached quickly if needed.

### M2 BCV

9-21. This is a tracked combat vehicle that serves as the primary command vehicle for brigade and mechanized infantry battalion commanders. It is equipped with three workstations and can carry the commander and two staff members. The workstations are tailored to meet the command and staff functions accomplished in the M2 BCV. The M2 BCV is located forward with the command group at battalion and brigade levels.

### M1 (ABRAMS) BCV

9-22. This is a specially equipped command tank with three workstations in the turret instead of the standard configuration with a main gun assembly installed. Its C2 role and functions are the same as the M2 BCV.

## A2C2S ON THE UH-60 AIRCRAFT

9-23. The A2C2S on the UH-60 Blackhawk helicopter serves as the maneuver brigade commanders' airborne TAC. As with other C2 platforms, the equipment and software configuration of the system will reflect operational requirements and the needs of the commander. The airborne C2 platform provides the same operational and planing support as do ground-mounted command platforms. Figure 9-4 shows a UH-60 and the technical architecture of the A2C2S design as it is mounted in the aircraft.

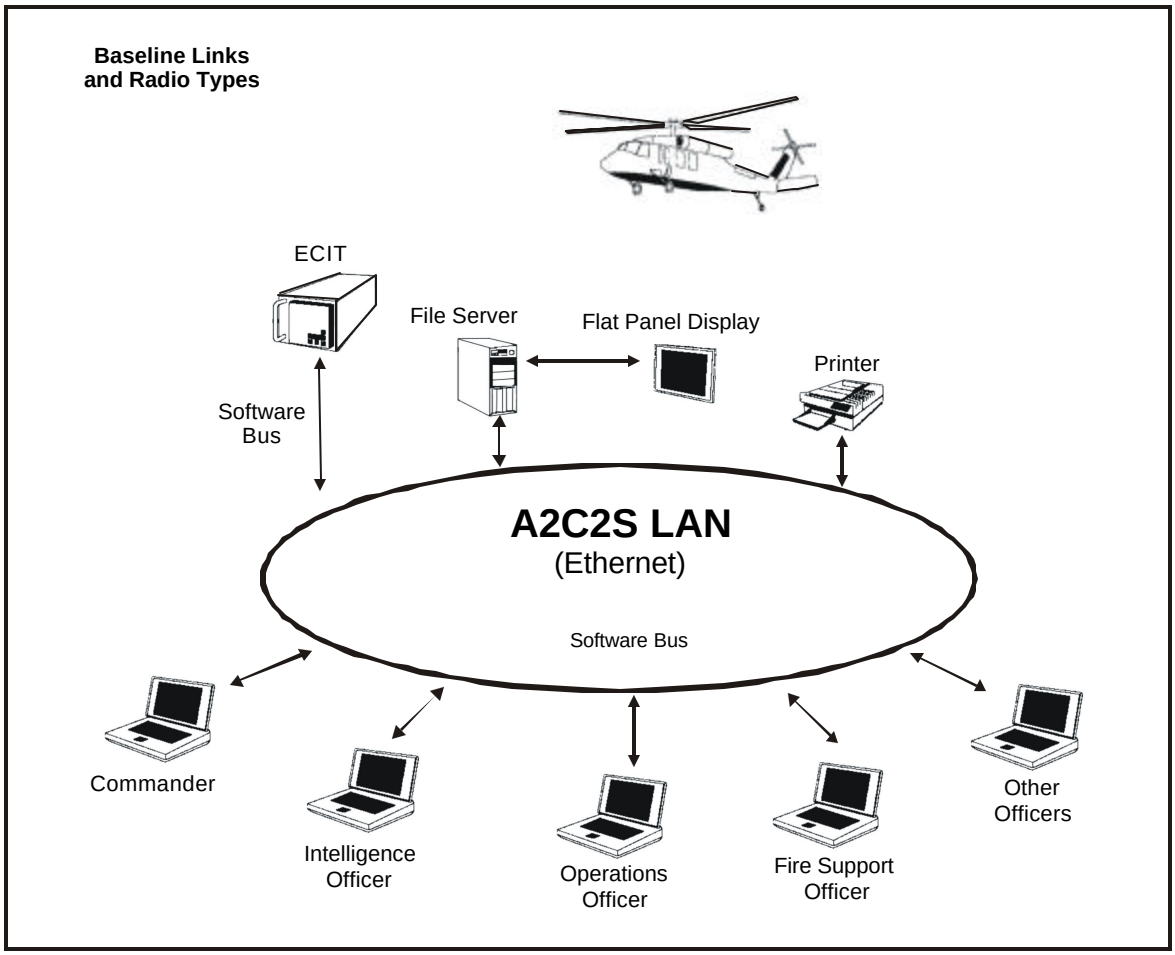


**Figure 9-4. Technical Architecture of the A2C2S Design**

## LAN ROUTER AND ETHERNET SWITCH FUNCTION

9-24. The LAN routers and Ethernet switches used within C2 platforms consist of commercial off-the-shelf (COTS) fixed configuration modular access systems. Their primary function is to link Ethernet LANs to WANs within the TI. The LAN routers and Ethernet switches are deployed with the C2Vs and BCVs at brigade and battalion levels. They serve communications interconnectivity with each vehicle and among vehicles collocated in a TOC or a TAC. The commanders, staff, and staff personnel of the units equipped with the C2V and the BCV are the primary users of LAN routers and Ethernet switches. Other users include all vehicles and crews that communicate with the C2V and the BCV.

9-25. The LAN routers and Ethernet switches support interconnections between TPNs, SINCGARS SIP/ASIP, radios with INCs, components of the ABCS LANs, and EPLRS. They provide ports for connecting the INCs, NTDR, TOC LAN (Ethernet 802.3), MSE TPN (X.25), and SunSPARC 20 and FBCB2 workstations. See FM 24-7 for more information on LAN routers and Ethernet switches.

## TACTICS AND TECHNIQUES

9-26. The paragraphs below discuss tactics and techniques for the location of the brigade/battalion S6, changes to task organization, and timely support to operations.

### LOCATION OF THE BRIGADE/BATTALION S6

9-27. The brigade/battalion S6 and S6 section personnel are generally located with their respective TOC. This places them in the best position to monitor current operations and take the measures needed to maintain the required operational functionality and capability of the TI. The TOC, as the planning cell for future operations, is the best location to determine the most likely requirements for the TI to support future operations. Considerable planning is required well in advance of operational changes to ensure that the TI is reconfigured as required to support the next phase or round of operations.

### CHANGES TO TASK ORGANIZATION

9-28. Changes to task organization are frequent and cause adjustments to the software configuration and to the databases supporting the TI. Changes to task organization can occur during–

- Initial deployment.
- Operations.
- Reconstitution of units.

9-29. This is particularly important to the C2 platforms, which act as communications hubs and NCSs for the radio and data nets used at brigade and below. The S6 plans the TI and provides the plan to subordinate unit communications personnel who install it. When changes to task organization occur, C2 platforms may need to be reinitialized with new system parameters to include–

- Asynchronous system numbers.
- Open shortest path first (OSPF) area identification numbers.
- IP addresses.
- Host names.

### TIMELY SUPPORT TO OPERATIONS

9-30. Significant changes to task organization may take considerable time to input into TI databases. The S6 should have a workable plan on how to effect the needed changes quickly even with units spread over a great distance. Technical expertise needs to be available to assist users in reinitializing if they have experienced an inadvertent system crash or lost communications. Systems experts may need to be attached to the TAC, TOC, and trains C2 platforms to provide on-site help. Reinitialization may be required, and changes to databases and communications paths may be too complex for it to be accomplished over the air. This may require dispatching personnel to the different C2 platforms to reinitialize the TI using a laptop or disk brought with them. Time and distance factors play an important role in maintaining the tempo of operations.