Chapter 6

Precision Lightweight Global Positioning Service Receiver in the TI

The PLGR is the primary positioning system used in the TI. The PLGR operates as a receiver in the GPS and provides positioning information to the ABCS platforms of the division.

BACKGROUND

6-1. The GPS is a space-based navigation and timing system that provides highly accurate, continuous, all-weather, three dimensional position, velocity, and time. A constellation of satellites broadcasts precise signals for use by navigation (receiver) sets. The PLGR is a highly accurate satellite signals navigation set (AN/PSN-11). It receives this position data and feeds this information into the FBCB2 and other ABCS platforms within the division.

6-2. The PLGR continuously tracks up to five satellites at once. It uses course/acquisition (C/A), P, or encrypted P (Y) codes. The PLGR has an antenna, keypad, backlit display, receiver-processor unit, and a battery. When operated in a stand-alone mode, the PLGR uses battery power and an integral antenna. It can also use an external power source and an external antenna.

6-3. The PLGR is designed for battlefield use, day or night, anywhere in the world. It can be installed in ground facilities as well as ground, air, and water vehicles.

UTILITIES

6-4. The PLGR provides the user with position coordinates, time, and navigation information under all conditions based on–

- No obstructions blocking the LOS satellite signals from reaching the antenna.
- Valid cryptographic keys protecting it from intentionally degraded satellite signal.

6-5. Many data fields display units of information (such as elevation). The unit's format can be changed. Map coordinates are entered as a waypoint (WP). When a WP is selected as a destination, the PLGR provides steering indication, azimuth, and range information to the destination. A desired course to a WP is entered, and, if the user should deviate from the established course, the offset distance from the course line and a direction arrow to it is displayed. Up to 99 WPs are entered, stored, and selected as a destination. A route is defined for navigation by designating WPs from a start

point to an end point or from an end point to a start point. The route may consist of up to nine legs, each with 10 WPs, linked together.

6-6. The PLGR provides data that enables users to successfully accomplish–

- Siting.
- Ground-based forward air control.
- Surveying.
- Engineer surveying.
- Tactical reconnaissance.
- Amphibious operations.
- Sensor emplacement.
- Airborne operations.
- Artillery forward observation.
- Signal intelligence operations.
- Close air support.
- Electronic warfare operations.
- Maneuver.
- Land navigation.

6-7. The PLGR data that supports these functions is available from a display or a serial data port on the device. In addition, the PLGR–

- Produces no signals that reveal the operator's position.
- Resists jamming.
- Works with other electronic systems.
- Is compatible with night vision goggles.
- Runs on internal batteries or from an external power source.
- Contains no high voltage or current.
- Automatically tests itself during operation.
- Contains BIT equipment for easy troubleshooting.
- Uses quick-disconnect connectors and fasteners to allow easy unit replacement.

FUNCTIONAL DESCRIPTION

6-8. The PLGR design features make it easy for the operator to use in all conditions expected in the tactical environment. Figure 6-1 shows these features.

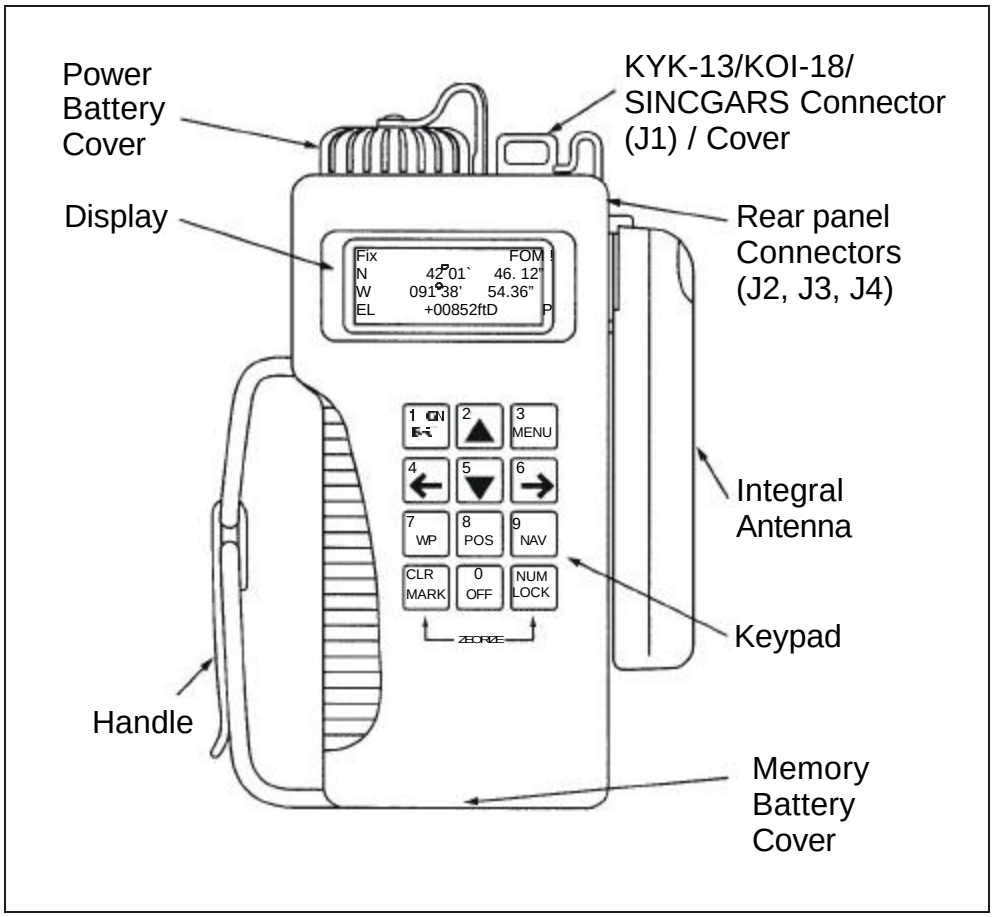

Figure 6-1. PLGR Design Features

SIZE

6-9. The PLGR is less than 9.5 inches long, 4.1 inches wide, and 2.6 inches deep. It weighs 2.75 pounds with all batteries in place. The small size and light weight make it easy to carry and use. The durable plastic case is sealed for all-weather use.

DISPLAY SCREEN

6-10. The PLGR screen displays alphanumeric data on a four line, 16-character screen. The data is displayed in several formats depending on the type of data and the operation being performed. A data display is made up of several fields. Some of the fields are intended for display only while others allow the value or the option to be changed by the user.

KEYPAD

6-11. The PLGR keypad has oversized keys for ease of operation, and it enables the user to use one of the dual modes: control (one-handed operation) and numeric (two-handed operation). The keypad has twelve multifunctional keys to control device operations. These operations include–

- Turning the PLGR on and off.
- Controlling the display screen brightness.
- Selecting the display for view.
- Performing area navigation.
- Entering data.
- Selecting user options.

INTEGRAL ANTENNA

6-12. Located on the right side of the PLGR, the integral antenna is swiveled to the upright position for best reception by optimizing the view angle while receiving the satellite signals. The swivel feature also allows the antenna to be kept in a compact storage configuration.

HANDLE

6-13. The PLGR handle is located on the left side of the device. It is designed so that the left hand can be inserted between the handle and the case. With the PLGR held this way, the left-hand thumb is free and positioned to operate the keypad.

J1 CONNECTOR

6-14. PLGR cryptographic keys and the SINCGARS time-fill data are loaded through the J1 connector, which is located on the top right side of the PLGR. The cryptographic keys are loaded from a KYK-13, KOI-18, or the ANCD. SINCGARS time fill data is loaded from the PLGR into a SINCGARS radio.

REAR PANEL CONNECTORS/COVERS

6-15. The J2, J3, and J4 connectors provide access for serial data ports, the external antenna, and external power. They are located on the rear panel of the PLGR.

POWER AND MEMORY BATTERIES/COVERS

6-16. The PLGR operates with electrical power from a lithium (BA-5800/U) or nickel cadmium battery or eight AA size batteries in a AA battery holder. In addition, a lithium (LS6 BA) battery provides power for the PLGR memory. Access to the power battery is gained by twisting off the cover located at the top left side of the device. At the bottom of the PLGR, the memory battery cover screws out for easy removal and replacement of the memory battery.

DANGER

The lithium battery used in the PLGR contains pressurized sulfur dioxide gas. The gas is toxic, and the battery MUST NOT be abused in any way that might cause the battery to rupture. Abusing the battery could result in an explosion or production of toxic gas that may cause injury or death.

OPERATIONAL CHARACTERISTICS

6-17. The following paragraphs discuss the PLGR operating characteristics.

ELEVATION LIMITS

6-18. The PLGR operates at elevations from –1,312 to +29,856 feet to +9,100 meters mean sea level. The maximum rate of elevation change for operation is 7.62 meters/second (25 feet/second) ascending or descending.

TEMPERATURE LIMITS

6-19. The PLGR operates at temperatures from –20° to +70° Celsius (–4° to +158° Fahrenheit).

HUMIDITY LIMITS

6-20. The PLGR operates in 0 to 100 percent relative humidity.

ERROR ESTIMATION

6-21. The PLGR selects satellites that are 10 degrees or more above the horizon (elevation angle) during initial acquisition. If less than four satellites are available at 10 degrees or more, an elevation angle of 0 degree is used for acquisition. After acquisition (normal tracking), satellites with an elevation of 0.5 degree or more are selected.

ACCURACY

6-22. With cryptographic keys installed, the PLGR provides position, velocity, and time accuracy better than the worst case accuracy listed in Table 6-1.

Table 6-1. PLGR's Worst Case Accuracy

Parameter	Stationary Mode	Constant Acceleration	Handheld	Surface Vehicle	Aircraft
Maximum velocity (kph)	0	36	36	90	999
3D spherical error probable (SEP) position error (m)	16	16	16	16	18
2D (2D root means square position error [m])	21	21	21	21	25
Horizontal (circular error probable [CEP] position error [m])	10	10	10	10	12
Vertical (vertical error probable [VEP] position error [m])	10	10	10	10	12
3D root mean square velocity error (kph)	N/A	0.72	1.8	7.2	72
Time mark 1 precise positioning service (PPS) error (ns)	100	100	100	100	100
HAVE QUICK time error (µs)	10	10	10	10	10
SINCGARS (ms)	50	50	50	50	50

FIGURE OF MERIT (FOM) AND TIME FIGURE OF MERIT (TFOM)

6-23. FOM and TFOM are the amounts of error that can exist when satellites are being tracked for position error and time error, respectively. FOM and TFOM are a representation of the PLGR's status that includes–

- Navigation mode.
- Position dilution of precision or horizontal dilution of precision.
- Degradation due to SA exclusion (using user range accuracy index).
- Availability of universal time coordinated offset data (TFOM only).

6-24. The FOM and TFOM are numbered from one to nine. The number reflects the total estimated position error (EPE) and estimated time error (ETE). Table 6-2 shows the FOM to EPE and the TFOM to ETE.

6-25. Conditions that affect FOM and TFOM include–

- Inappropriate operating mode.
- Lack of satellites due to antenna masking (inability of the PLGR to receive satellite signals).
- Age of the differential GPS (DGPS) corrections (when using DGPS corrections).

Table 6-2. FOM to EPE and TFOM to ETE

FOM Value	EPE	TFOM Value	ETE
1	< 25 meters (82 ft/27 yd)	1	< 1 nanosecond
2	< 50 meters (164 ft/55 yd)	2	< 10 nanoseconds
3	< 75 meters (246 ft/82 yd)	3	< 100 nanoseconds
4	< 100 meters (328 ft/109 yd)	4	< 1 microsecond
5	< 200 meters (656 ft/219 yd)	5	< 10 microseconds
6	< 500 meters (1640 ft/547 yd)	6	< 100 microseconds
7	< 1000 meters (3280 ft/1093 yd)	7	< 1 millisecond
8	< 5000 meters (16,400 ft/5466 yd)	8	< 10 milliseconds
9	> 5000 meters (16,400 ft/5466 yd)	9	> 10 milliseconds

CONFIGURATIONS

6-26. The various PLGR configurations provide maximum flexibility to its users in their accomplishment of TI functions. The PLGR is used–

- By itself (internal battery and integral antenna).
- With an external antenna (remote, helmet, and aircraft).
- With an external, direct current power cable and an alternating current power adapter.
- With the mount.
- With any combination of PLGRs, external antenna, external power cable/adapter, or mount.

INTERFACES

6-27. The PLGR supports external interfaces with several other types of equipment, including–

- Other PLGRs.
- SINCGARS SIP/ASIP.
- HAVE QUICK radios.
- RS-232 serial port.
- RS-422 serial port.

DEPLOYMENT

6-28. The PLGR deployment is closely related to that of the force it supports. It is used at all echelons of brigade and below for the conduct of operations requiring positioning and navigation (POS/NAV) functionality. These numerous functions vary in their requirements for POS/NAV support. The PLGR's size, weight, and portability are very compatible with the users'

mobility. Thus, wherever the support is needed throughout the battlespace, the PLGR can provide position, time, and navigation information.

6-29. The PLGR is distributed throughout all units at each echelon for use in combat, CS, and CSS applications. The PLGR is a key component of the C2 and TI platforms comprising the TOCs, TACs, and the maneuver and supporting unit platforms.

OPERATIONAL PROCEDURES

6-30. The key to operating the PLGR is understanding the PLGR keypad and the basic principles of data entry associated with its use is. The paragraphs below discuss the keypad and its operation.

KEYPAD TERMS

6-31. Table 6-2 lists the operation and data entry terms associated with the PLGR keypad.

Table 6-2. Keypad Terms

Term	Function
Field	Area of the display having a specific type of information or indication. Some fields only display information; these fields cannot be selected. Other fields may be selected, then changed or acted on.
Cursor	Shows the current selected field. It appears on the display screen as a blinking field or the double arrow symbol (⇑⇓).
Select (A Field)	To select a field, the cursor is moved to the desired field. The cursor is moved by using the left-arrow key(←) or the right arrow key (→).
Scroll	Is accomplished using the up-arrow key (↑) or the down-arrow key (↓). When the cursor is on the paging field, scrolling changes pages. When a field other than paging is selected, scrolling changes the contents of the field.
Function Field	This field causes a specific action (function) to be performed when the field is activated. Examples of function fields include– • **Activate** — selects a function field and activates the function by pressing the up and down arrow. • **CLR** — clears the operational field of data. • **SAVE** — saves the current information in the field. • **QUIT** — leaves the function.

KEYPAD OPERATION

6-32. Figure 6-2 shows the PLGR keypad's twelve multifunctional keys. These keys are used to enter data and control data displays.

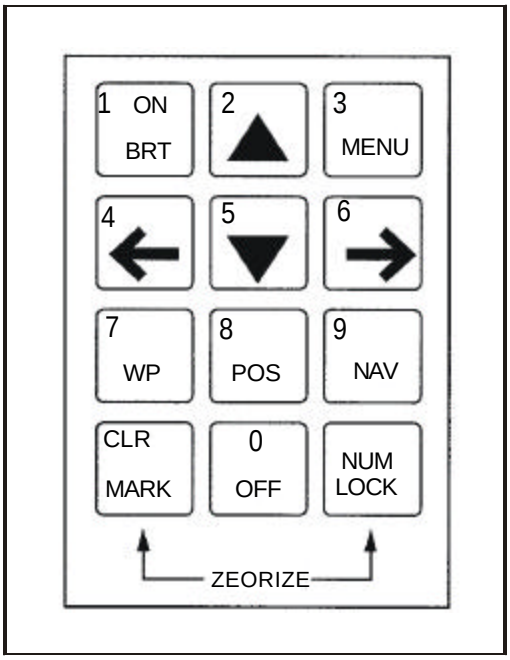

Figure 6-2. PLGR Keypad Keys

Keypad Operating Modes

6-33. The PLGR keypad operates in either a control mode or a numeric mode. The keypad goes to control mode when the PLGR is powered on. The NUM LOCK key is used to toggle between the two modes. When the PLGR is in control mode, a P is displayed in the lower right-hand corner of the display. When it is in the numeric mode, an N is displayed in the lower right-hand corner. The two modes enable the PLGR operator to accomplish key functions. Figure 6-3 shows the PLGR keypad operating modes.

NOTE: Control is the default mode except for some applications such as MGRS coordinates entry where numeric is the default mode.

6-34. **Control Mode.** This mode allows display access via the MENU, WP, POS, NAV, and MARK keys. Pressing one of these keys brings up the top-level display associated with that key. Data entry is a two-step process beginning with using the left-arrow and right-arrow keys to move the cursor to the entry location, and then using the up arrow and down arrow keys to scroll data scroll data values and options. Pressing a key in this mode enters the numeric value into the selected display field. Nonnumeric data is entered in the same manner as in the scroll data values and options.

6-35. **Numeric Mode**. This mode allows the direct entry of numeric data. It allows display access via the MENU, WP, POS, NAV, and MARK keys only when a nonnumeric field is selected. Numeric mode is useful when several numeric entries are made, such as initializing position.

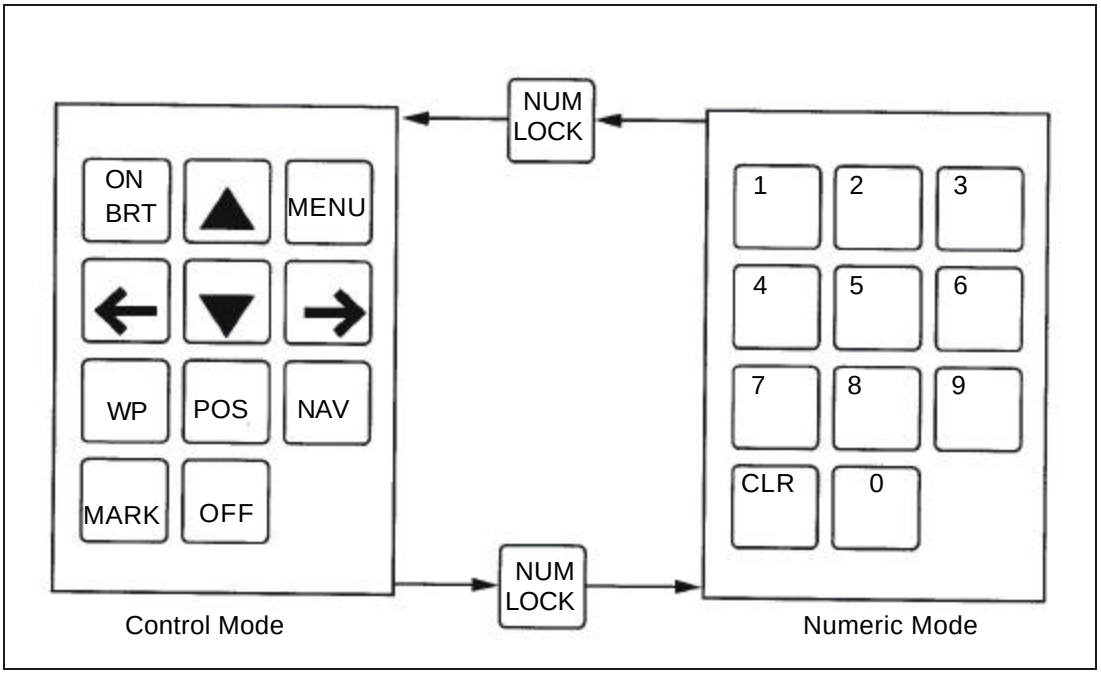

Figure 6-3. PLGR Keypad Operating Modes

Keypad Operation in Control Mode

6-36. Use the following primary keys to operate in the control mode.

6-37. **ON/BRT Key**. The first press of the ON/BRT key turns the PLGR on; pressing the key again allows the operator to adjust the display backlighting.

6-38. **Left/Right Arrow Keys**. The left and right arrow keys are used to move the cursor from field to field in the display. They do not change the value of the displayed data. The arrow keys have an auto repeat action when held, and the cursor sequences through the available fields until the key is released.

6-39. **Up/Down Arrow Keys**. The up and down arrow keys change display pages and alpha/number field values. They also activate functions. The operation performed depends on the selected field when the keys are pressed. When the cursor is on an option field, pressing either key scrolls through the options. When the cursor is on a changeable value field, pressing the up arrow key increases the field to the next higher available value, and pressing the down-arrow key decreases the field to the next lower available value.

6-40. **MENU Key**. Pressing the MENU key displays the PLGR menu. Figure 6-4 shows the two display pages.

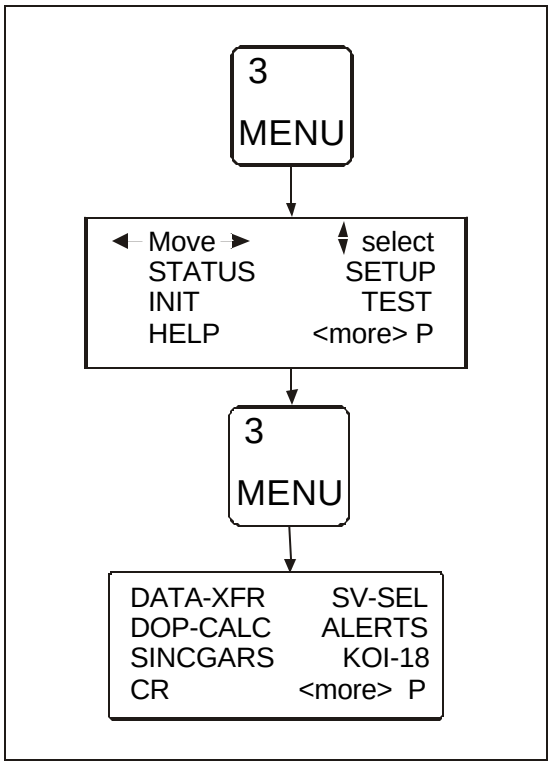

Figure 6-4. PLGR Menu Display Pages

6-41. The first line of the MENU display has two nonselectable fields. The Move label shows that the left and right arrow keys move the cursor between fields. The select label shows that the up and down arrow keys are active. Table 6-3 and Table 6-4 list the available MENU options for page one and page two, respectively.

Table 6-3. Menu Options for Page One

Display	Function
STATUS	Provides system, battery, antenna, satellite, and other status information.
SETUP	Allows user to select operating mode and to coordinate system, units, and other operating and display parameters.
INIT	Allows user to initialize position, time, date, user-defined datum, and cryptographic information.
TEST	Allows the user to command the PLGR to self-test.
HELP	Brings up the help displays.

Table 6-4. Menu Options for Page Two

Display	Function
DATA-XFER	Allows transfers of set-ups, time, WPs, and satellite data to another PLGR.
SV-SEL	Allows user to include or remove satellites for the PLGR to use.
DOP-CALC	Commands the PLGR to calculate the best satellite geometry for a given period.
ALERTS	Provides for set-up and control of corridor, position error, and buffer alerts.
SINCGARS	Allows user to load time fill data into a SINCGARS compatible radio.
KOI-18	Allows user to load cryptographic key data via a KOI-18 COMSEC device.
CRYPTO	Provides access to cryptographic entry, status, and zeroize displays.

CAUTION

CRYPTO is a menu option that is displayed only when the PLGR is loaded with cryptographic keys. If CRYPTO is not displayed, the PLGR functions as an SPS receiver. SPS receivers are not effective for combat operations. These receivers are affected by the intentional SA errors, and there is no protection from a spoofing threat. NOT HAVING CRYPTO LOADED COULD RESULT IN MISSION FAILURE.

6-42. **WP Key**. Pressing the WP key brings up the WP menu display shown in Figure 6-5. Table 6-6 lists the WP menu functions.

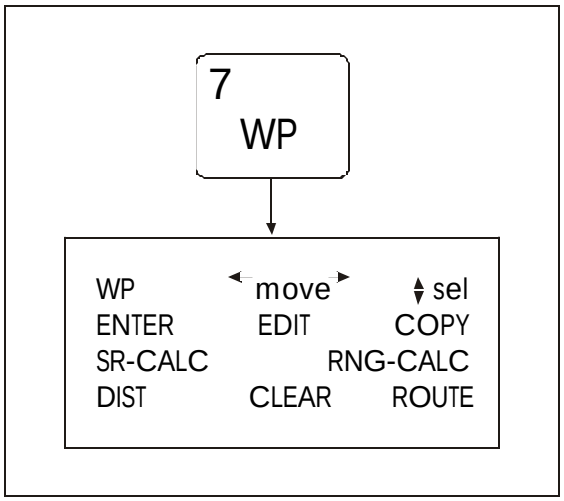

Figure 6-5. PLGR WP Menu Display

Table 6-6. WP Menu Options

Display	Functions
ENTER	Enters the position, identifier, datum, and magnetic variation of the WPs.
EDIT	Edits or reviews the position, identifier, datum, and magnetic variation of the entered WPs.
COPY	Copies position, identifier, datum, and magnetic variation from one WP to another.
SR-CALC	Calculates the coordinates of a new WP using slant range, azimuth, and elevation angle or WP elevation from either present position or from another WP.
RNG-CALC	Calculates the coordinates of a new WP using range, azimuth, and elevation angle or WP elevation from a present position or from another WP.
DIST	Determines the range, azimuth, and elevation angle from one WP to another.
CLEAR	Clears from memory a single WP or a range of WPs.
ROUTE	Links together the legs of a route using defined WPs.

6-43. **POS Key**. Pressing this key brings up the position display. It consists of three pages that display current position, time, speed, and satellite status. The last-used position page comes up when the POS key is pressed from another display. While viewing a position display page, pressing the POS key brings up the next position page. Position display pages are scrolled using the up and down arrow keys.

6-44. **MARK Key**. This key marks the present position as a WP. The first unused WP is selected, but can be changed to any WP number. This allows the current position to be stored as a WP. The mark display comes up with the cursor on the WP number field. This is the first unused number in the WP database.

6-45. **OFF Key.** Pressing this key turns the PLGR off, and the unit shows the power-off display. At that time, a 30-second power-off timer is started. This countdown feature prevents accidental turnoff. If the operator during the countdown does not act, the timer will turn off the PLGR at the end of the 30 seconds. While the timer is counting down, the operator can press the ON key to cancel the power-off and return to the last display or can press the OFF key to turn off the PLGR immediately.

6-46. **Zeroize Keys**. Pressing the CLR/MARK and NUM LOCK keys at the same time brings up the zeroize display. The operator can press the ON key to cancel the zeroize and return to the previous display or press the OFF key to destroy all data in the PLGR and stop all navigation functions.

CAUTION

The zeroize function is to be used only in emergencies to protect mission sensitive data. The zeroize function destroys all data that is entered into or collected by the PLGR. Under circumstances dictating the need to zeorize, it should be understood that failure to do so could compromise security and the success of missions.

Keypad Operation in Numeric Mode

6-47. Keypad operation depends on the type of field that is selected. If a numeric field is selected while in the numeric mode, pressing a key enters its value in the selected field. If a nonnumeric field is selected, keypad operation is the same as described for the control mode. The CLR key is used when the keypad is in the numeric mode to move the cursor to the left and to allow wrong entries to be reentered.

Data Entry

6-48. The PLGR display has some data fields that only display information and others that are changed or selected to activate functions. The cursor is only moved to fields that can be changed or selected. When a field is selected, it blinks. Entering data or activating a function using the PLGR keypad is a two-step process. The cursor is moved to the selected field, causing it to blink. Then the contents are changed or the function is activated. Three types of selectable fields are discussed below. (See TM 11-5825-291-13 for a detailed discussion of data entry.)

6-49. **Numeric Fields**. This field contains a number, and selecting the field using the left/right arrow key in the control mode changes the value. The up and down arrow keys are used to scroll through the valid numeric values, or the values are entered by pressing the number keys in the numeric mode.

6-50. **Option Fields**. This field contains alphabetic or symbolic data (+, -). Select the field using the left and right arrow keys in the control mode; then use the up and down arrow keys to scroll through the available options to change the contents of the option fields. To leave the option field, press the left/right arrow key. Data entry for option fields is the same in the control and numeric modes.

6-51. **Function Fields**. This field performs a specific process or leads to other function fields. Activate a function field by selecting the field using the left/right arrow key in the control mode and pressing the up/down arrow key. Table 6-7 provides the selectable function fields.

Table 6-7. Selectable Function Fields

Selectable Field	Function
Menu options	Provides two pages that lead to 11 processes (12 if cryptographic keys are installed).
Paging field	Moves to the next or previous display page (the paging field does not blink when selected).
CLR	Clears data entries on the current display page.
ACTIVATE	Indicates the selected process is performed.
SAVE	Saves data from the current display page.
QUIT	Indicates the process associated with the current page is not performed.
STORE	Stores all data on the display page in the set.
MARK	Marks and saves selected position or WP data.
SEND	Sends data.
LOAD	Loads cryptographic keys from the KOI-18.
START	Starts dilution of precision (DOP) calculations.
RETRY	Repeats initial process/procedure.
CANCEL	Cancels selected process/procedure.
EXIT	Leaves the option/display.

USERS

6-52. The PLGR is readily available in all units of the force including most ABCS platforms from brigade to platoon level. The units possess the POS/NAV capabilities required to–

- Locate own position and that of others more accurately.
- Maintain positional awareness of other units or personnel.
- Conduct ground and/or air movements with greater control.

APPLICATIONS

6-53. The paragraphs below discuss PLGR applications that are important to TI operations.

FBCB2 Support

6-54. The PLGR is interfaced with the FBCB2 to provide POS/NAV data to support FBCB2 operational functions. It serves as the source of POS/NAV data input to the FBCB2. The POS/NAV input provides GPS data for the SA subarchitecture of the TI to support automatic position reporting, navigation with WPs and directional steering, and other reports (for example, spot and contact).

G6/S6 Vehicle

6-55. As the management platform for the TI, the G6/S6 vehicle uses data from the PLGR to establish the POS/NAV orientation of the TI at all echelons of brigade and below.

C2 Platforms

6-56. The TI supports most operations that will be conducted employing the C2 platforms. These platforms provide the force with the mobile capabilities essential to achieving success in exercising battle command of the force on the dynamic modern battlefield. Each C2 platform is a total system consisting of automation systems, communications systems, and the platform that provides it with shelter and mobility for the conduct of its functions.

6-57. The PLGR functions as an essential component of this total system. It provides POS/NAV data that supports the installed FBCB2 device and enables the C2 platform crew to operate effectively whether stationary or while conducting C2 on the move (C2OTM).

Combat, CS, CSS Platforms

6-58. Used with the FBCB2 interface, the PLGR enhances each of the platforms' C2 and SA capabilities as elements of the TI-equipped force. Employed in a POS/NAV mode, it is an invaluable aid to the platform operators in their combat, CS, or CSS roles.

TACTICS AND TECHNIQUES

6-59. The PLGR provides its users with GPS capabilities that are space-based, jam-resistant, and available 24-hours a day, all over the globe. The GPS is an integral component of the force's ability to function effectively across the operational continuum from combat to security, assistance, and support operations. The PLGR is the most common GPS Army user-equipment employed.

TACTICS

6-60. The PLGR's major contributions to the tactics of the TI-equipped force include–

- Continuous provision of GPS data to support the contribution of automatic SA information through the FBCB2.
- Accurate POS/NAV data to units and personnel for position location and ground and air navigation.
- Secure GPS signals as an additional contribution to operations security (OPSEC).
- Compatibility of its size, weight, and ruggedness with the mobility and speed of mounted and dismounted operations.
- Availability in significant numbers to all elements.
- Ease of use by all personnel.

TECHNIQUES

6-61. The following paragraphs discuss the techniques needed to operate the PLGR in support of the TI-equipped force.

Position Display

6-62. This consists of three pages that display current position; time, date, track, and ground speed; and a satellite usage summary. An important premission step is to always check position, position error datum, current cryptographic key, and current almanac data.

Navigation

6-63. The PLGR's navigation feature finds one's present position; uses azimuth, range, and steering information relative to other positions or points; and displays the information. Three navigation display modes may be accessed. The navigation mode selected determines the type of information shown on the display, and changing the mode changes the format of the display.

Mission Operations

6-64. In addition to position display and navigation information, the PLGR uses the following applications to support mission operations:

- Surveying.
- Targeting.
- Automark.
- HAVE QUICK.
- SINCGARS.
- Time output.
- Time only.
- DGPS.
- Low signal (dense foliage) use.

See TM 11-5825-291-13 for a detailed discussion of PLGR operation techniques in these areas.